Gaggenau

en User manual and installation instructions

VI462115

Induction hob

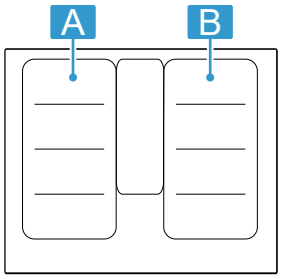

A / B	12[1]	b[1]
	2200 W	3700 W
	3300 W	3700 W
	2600 W	3700 W
	3300 W	3700 W

[1] IEC 60335-2-6

Table of contents

INFORMATION FOR USE

1 Safety ... 3
2 Avoiding material damage ... 5
3 Environmental protection and saving energy ... 6
4 Suitable cookware ... 6
5 Disposal ... 7
6 Familiarising yourself with your appliance ... 8
7 Accessories ... 10
8 Before using for the first time ... 10
9 Basic operation ... 11
10 Flex Zone ... 13
11 FlexPlus Zone ... 14
12 Timer function ... 15
13 Booster for pots ... 15
14 Frying sensor function ... 16
15 Locking the control panel for cleaning ... 18
16 Automatic switch-off ... 19
17 Basic settings ... 19
18 Home Connect ... 20
19 Cooktop-based Hood Control ... 25
20 Cookware test ... 26
21 Cleaning and servicing ... 27
22 FAQs ... 28
23 Troubleshooting ... 29
24 Customer Service ... 31
25 Declaration of Conformity ... 31

26 INSTALLATION INSTRUCTIONS ... 31
26.3 General information ... 32

⚠ 1 Safety

Observe the following safety instructions.

1.1 General information

- Read this instruction manual carefully.
- Keep the instructions, the appliance pass and the product information safe for future reference or for the next owner.
- Do not connect the appliance if it has been damaged in transit.

1.2 Intended use

Only a licensed professional may connect appliances without plugs. Damage caused by incorrect connection is not covered under the warranty.
The appliance can only be used safely if it is correctly installed according to the safety instructions. The installer is responsible for ensuring that the appliance works perfectly at its installation location.
Only use this appliance:

- To prepare meals and drinks.
- Under supervision. Never leave the appliance unattended when cooking for short periods.
- In private households and in enclosed spaces in a domestic environment.
- Up to an altitude of max. 4000 m above sea level.

Do not use the appliance:

- With an external timer or a separate remote control. This does not apply if operation with appliances included in EN 50615 is switched off.

If you wear an active implantable medical device (e.g. a pacemaker or defibrillator), check with your doctor that it complies with Council Directive 90/385/EEC of 20th June 1990, EN 45502-2-1 and EN 45502-2-2, and that it has been chosen, implanted and programmed in accordance with VDE-AR-E 2750-10. If these conditions are satisfied, and if, in addition, non-metal cooking utensils and cookware with non-metal handles are used, it is safe to use this induction hob as intended.
If these conditions are satisfied, and if, in addition, non-metal cooking utensils and cookware with non-metal handles are used, it is safe to use this induction hob as intended.

1.3 Restriction on user group

This appliance may be used by children aged 8 or over and by people who have reduced physical, sensory or mental abilities or inadequate experience and/or knowledge, provided that they are supervised or have

been instructed on how to use the appliance safely and have understood the resulting dangers.
Do not let children play with the appliance.
Children must not perform cleaning or user maintenance unless they are at least 15 years old and are being supervised.
Keep children under the age of 8 years away from the appliance and power cable.

1.4 Safe use

⚠ WARNING – Risk of fire!

Leaving fat or oil cooking on an unattended hob can be dangerous and may lead to fires.
- Never leave hot oil or fat unattended.
- Never attempt to extinguish a fire using water; instead, switch off the appliance and then cover with a lid or a fire blanket.

The cooking surface becomes very hot.
- Never place flammable objects on the cooking surface or in its immediate vicinity.
- Never place objects on the cooking surface.

The appliance will become hot.
- Do not keep combustible objects or aerosol cans in drawers directly underneath the hob.

Hob covers can cause accidents, for example due to overheating, catching fire or materials shattering.
- Do not use hob covers.

After every use, switch off the hob using the controls.
- Do not wait until the hob turns off automatically as there are no longer any pots and pans on it.

Food may catch fire.
- The cooking process must be monitored. A short process must be monitored continuously.

⚠ WARNING – Risk of burns!

The appliance and its parts that can be touched become hot during use, particularly the hob surround, if fitted.
- Caution should be exercised here in order to avoid touching heating elements.
- Young children under 8 years of age must be kept away from the appliance.

Hob protective grilles may cause accidents.
- Never use hob protective grilles.

The appliance becomes hot during operation.
- Allow the appliance to cool down before cleaning.

Metal objects on the hob quickly become very hot.
- Never place metal objects (such as knives, forks, spoons and lids) on the hob.

⚠ WARNING – Risk of electric shock!

Incorrect repairs are dangerous.
- Repairs to the appliance should only be carried out by trained specialist staff.
- Only use genuine spare parts when repairing the appliance.
- If the power cord of this appliance is damaged, it must be replaced with a special connection cable, which is available from the manufacturer or his Customer Service.

If the appliance or the power cord is damaged, this is dangerous.
- Never operate a damaged appliance.
- If the surface is cracked, you must switch off the appliance in order to prevent a possible electrical shock. To do this, switch off the appliance via the fuse in the fuse box rather than at the main switch.
- Call customer services. → *Page 31*

An ingress of moisture can cause an electric shock.
- Do not use steam- or high-pressure cleaners to clean the appliance.

The insulation on cables of electrical appliances may melt if it touches hot parts of the appliance.
- Never bring electrical appliance cables into contact with hot parts of the appliance.

If metallic objects come into contact with the fan that is located on the underside of the hob, this may cause an electric shock.
- Do not store long, pointed metallic objects in the drawers below the hob.

⚠ WARNING – Risk of injury!

Saucepans may suddenly jump due to liquid between the saucepan base and the hotplate.
- Always keep hotplates and saucepan bases dry.
- Never use icy-cold cookware that has been in the freezer.

When cooking in a bain marie, the hob and cooking container could shatter due to overheating.

- The cooking container in the bain marie must not directly touch the bottom of the water-filled pot.
- Only use heat-resistant cookware.

An appliance with a cracked or broken surface can cause cuts.

- Do not use the appliance if it has a cracked or broken surface.

⚠ **WARNING – Risk of suffocation!**

Children may put packaging material over their heads or wrap themselves up in it and suffocate.

- Keep packaging material away from children.
- Do not let children play with packaging material.

Children may breathe in or swallow small parts, causing them to suffocate.

- Keep small parts away from children.
- Do not let children play with small parts.

2 Avoiding material damage

This is where you can find the most common causes of damage and tips on how to avoid them.

Damage	Cause	Action
Stains	Unsupervised cooking process.	Monitor the cooking process.
Stains, blisters	Spilled food, especially food with a high sugar content.	Remove immediately with a glass scraper.
Stains, blisters or fractures in the glass	Defective cookware, cookware with melted enamel or cookware with copper or aluminium base.	Use suitable cookware that is in a good condition.
Stains, discolouration	Unsuitable cleaning methods.	Only use cleaning agents that are suitable for glass ceramic, and only clean the hob when it is cold.
Blisters or fractures in the glass	Knocks or falling cookware, cooking accessories or other hard or pointed objects.	When cooking, do not hit the glass or let objects fall onto the hob.
Scratches, discolouration	Rough cookware bases or moving the cookware on the hob.	Check the cookware. Lift the cookware when moving it.
Scratches	Salt, sugar or sand.	Do not use the hob as a work surface or storage space.
Damage to the appliance	Cooking with frozen cookware.	Never use frozen cookware.
Damage to the cookware or the appliance	Cooking without contents.	Never place or heat empty cookware on a hot cooking zone.
Glass damage	Melted material on the hot cooking zone or hot pot lid on the glass.	Do not place greaseproof paper or aluminium foil nor plastic containers or pot lids on the hob.
Overheating	Hot cookware on the control panel or on the frame.	Never place hot cookware on these areas.

ATTENTION!

A fan is located on the underside of this hob.

- If a drawer is located on the underside of the hob, do not store any small or pointed objects, paper or tea towels in it. These objects may be sucked in and damage the fan or impair the cooling.
- There must be a clearance of at least 2 cm between the contents of the drawer and the fan entry point.

3 Environmental protection and saving energy

3.1 Disposing of packaging

The packaging materials are environmentally compatible and can be recycled.

- Sort the individual components by type and dispose of them separately.

3.2 Saving energy

If you follow these instructions, your appliance will use less energy.

Select the cooking zone to match the size of your pan. Centre the cookware on the hob.
Use cookware whose base diameter is the same diameter as the hotplate.

Tip: Cookware manufacturers often give the upper diameter of the saucepan. It is often larger than the base diameter.

- Unsuitable cookware or incompletely covered cooking zones consume a lot of energy.

Cover saucepans with suitable lids.

- Cooking without a lid consumes considerably more energy.

Lift lids as infrequently as possible.

- When you lift the lid, a lot of energy escapes.

Use a glass lid.

- You can see into the pan through a glass lid without having to lift it.

Use pots and pans with flat bases.

- Uneven bases increase energy consumption.

Use cookware that is suitable for the quantity of food.

- Large items of cookware containing little food need more energy to heat up.

Cook with only a little water.

- The more water that is contained in the cookware, the more energy is required to heat it up.

Turn down to a lower power level early on.

- If you use an ongoing power level that is too high, you will waste energy.

Product Information according (EU) 66/2014 can be found on the attached appliance pass and online on the product page for your appliance.

4 Suitable cookware

Cookware that is suitable for induction cooking must have a ferromagnetic base, i.e. it must be attracted by a magnet. The base must also match the size of the cooking zone. If cookware is not detected on a cooking zone, place this on the cooking zone with the next smallest diameter.

4.1 Size and characteristics of the cookware

To correctly detect the cookware, take the size and the material of the cookware into consideration. All cookware bases must be perfectly flat and smooth.
You can use Cookware test to check whether your cookware is suitable. You can find more information about this under
→ *"Cookware test", Page 26*.

Cookware	Materials	Properties
Recommended cookware 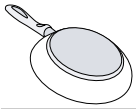	Stainless steel cookware in a sandwich design that distributes the heat well.	This cookware distributes the heat evenly, heats up quickly, and ensures that it can be detected easily.
	Ferromagnetic cookware made of enamelled steel, cast iron or special induction cookware made of stainless steel.	This cookware heats up quickly and ensures that it can be detected easily.
Suitable 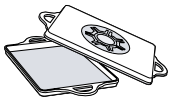 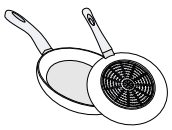	The base is not fully ferromagnetic.	If the ferromagnetic area is smaller than the base of the cookware, only the area that is ferromagnetic heats up. As a result, the heat is not distributed evenly.
	Cookware bases with aluminium content.	These reduce the ferromagnetic area, which means that less power is emitted to the cookware. This cookware may not be sufficiently detected or may not be detected at all, and therefore does not heat sufficiently.
Not suitable	Cookware made from normal thin steel, glass, clay, copper or aluminium.	

Notes

- Do not use adapter plates between the hob and the cookware.
- Do not heat up empty cookware and do not use cookware with a thin base, as this may become very hot.

5 Disposal

5.1 Disposing of old appliance

Valuable raw materials can be reused by recycling.

- Dispose of the appliance in an environmentally friendly manner.
  Information about current disposal methods are available from your specialist dealer or local authority.

This appliance is labelled in accordance with European Directive 2012/19/EU concerning used electrical and electronic appliances (waste electrical and electronic equipment - WEEE).
The guideline determines the framework for the return and recycling of used appliances as applicable throughout the EU.

6 Familiarising yourself with your appliance

6.1 Cooking with induction

In comparison to conventional hobs, induction technology brings with it a series of changes and has a number of benefits such as time savings when cooking and frying, energy savings as well as greater ease of cleaning and care. It also offers improved heat control as the heat is generated directly in the cookware.

6.2 Control panel

You can use the control panel to configure some functions of your appliance and to obtain information about the operating status.

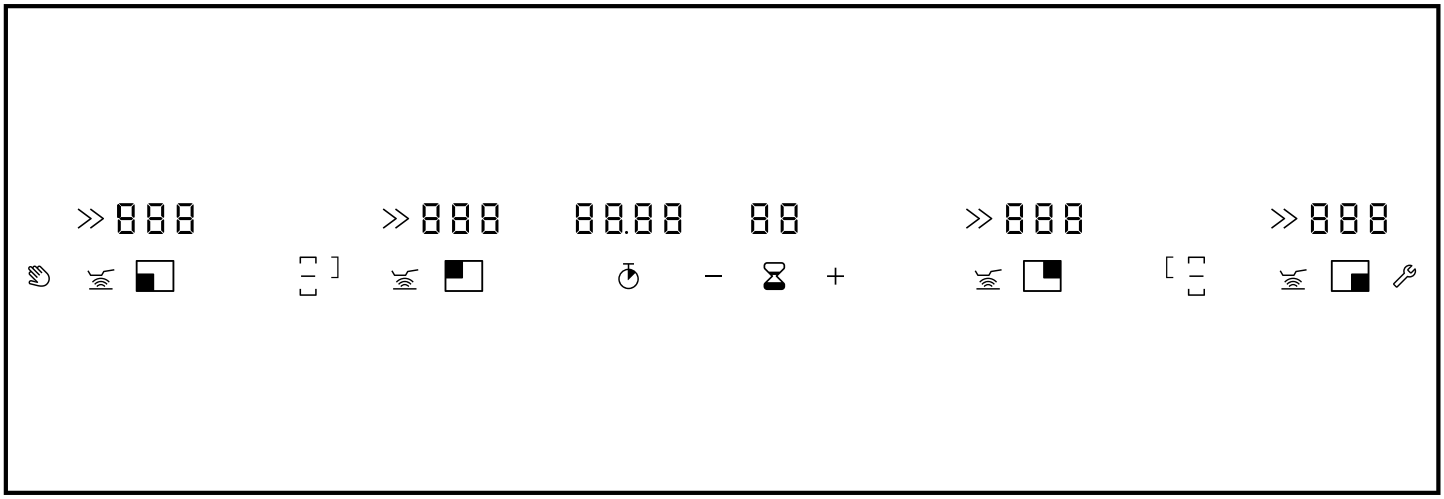

Touch fields

Touch fields are touch-sensitive surfaces. To select a function, touch the relevant field.

	Locking the control panel for cleaning
	Switching on the frying sensor function
	Opening the basic settings
−/+	Settings selection
	Switching on the stopwatch
	Setting the short-term timer

Indicators on the display

The displays show set values and functions.

00	Operating status
1-12	Power levels
H/h	Residual heat
00	Short-term timer
00.00	Stopwatch function
	Front left cooking zone
	Rear left cooking zone
	Front right cooking zone
	Rear right hotplate
»/P	PowerBoost function
[ ]	Flex function activated
[ ]	Flex function deactivated
[/]	FlexPlus cooking zone
A	Frying sensor
_/=/≡	Frying sensor temperature indicator
	Home network

Touch fields and displays

When the hob is switched on, the symbols for the currently available touch fields light up white. The displays for the selected hotplates or functions light up orange. Touch a symbol to activate the corresponding function. A confirmation signal sounds.

- Keep the control panel clean and dry. Moisture reduces its effectiveness.
- Do not place any cookware near the displays or touch fields. The electronics may overheat.

Control knob

You can use the control knobs to set the power levels and other functions of your appliance and to obtain information about the operating status.
You can turn the control knobs clockwise or anti-clockwise, starting from position 0.

The markings on the control knob show the setting from power level 1 to 12, the PowerBoost function and the flex function.

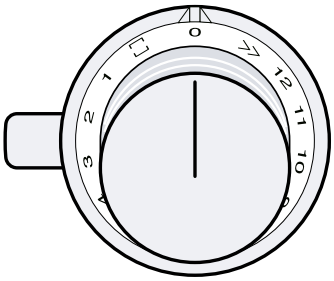

0	Switching off the cooking zone
1-12	Setting the power level
»	Activating the PowerBoost function
[ ]	Activating the flex function

Indicators on the illuminated rings

Each control knob is encircled by an illuminated ring with various display functions.
The illuminated ring on the control knob has an visual indicator for each function. The illuminated ring changes colour when you activate particular functions or processes.

The illuminated ring on the control knob lights up orange during operation. You can choose between two colour shades. If you have several appliances installed next to each other, you can change the shades in the settings for the appliances so that all of the illuminated rings light up in the same shade.
→ *"Changing the colour of the illuminated ring", Page 12*

Indicator	Name
Off	Appliance OFF
Lights up: Orange	Appliance ON
Flashing: Orange	Appliance OFF Residual heat indicator
Light up: Blue	Home Connect
Flash: Blue	Home Connect, appliance is connected to the home network
Flashing alternately: Orange and white	Safety switch-off function, power failure
Flashing alternately: Yellow and magenta	Appliance fault. Call customer service.
Lights up: Green for a few seconds, then turns yellow	The appliance is initialising during initial connection or following a power failure

6.3 Distribution of the cooking zones

The specified power has been measured with the standard pots which are described in IEC/EN 60335-2-6. The power may vary depending on the size of the cookware or cookware material.

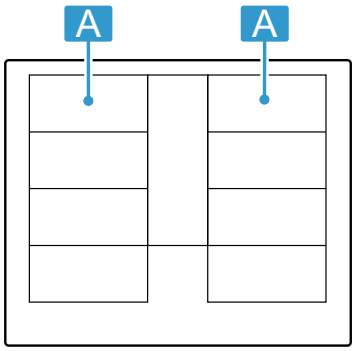

Area	Highest power level	
A	Power level 12 Booster for pots	2,200 W 3,700 W
A	Power level 12 Booster for pots	3,300 W 3,700 W
A	Power level 12 Booster for pots	2,600 W 3,700 W
A	Power level 12 Booster for pots	3,300 W 3,700 W

6.4 Cooking zone

Before you start cooking, check whether the size of the cookware fits the cooking zone that you want to use for cooking.

Area	Cooking zone type
	Single cooking zone
	Flexible cooking zone → *"Flex Zone", Page 13*
	FlexPlus cooking zone → *"FlexPlus Zone", Page 14*

6.5 Residual heat indicator

The hob has a residual heat indicator for each cooking zone. The residual heat indicator indicates that a cooking zone is still hot. Do not touch the cooking zone while the residual heat indicator is still lit or immediately after the residual heat indicator goes out.
Depending on the amount of residual heat, the display shows the following symbols:

- H: High temperature
- h: Low temperature

The illuminated ring on the control knob flashes oranges.
If you remove the cookware from the cooking zone during cooking, the power level indicator flashes and the illuminated ring on the control knob lights up orange.
If you switch off the cooking zone, the residual heat indicator lights up and the illuminated ring on the control knob flashes. Even after the hob has been switched off, the residual heat indicator will stay lit for as long as the cooking zone remains warm.

7 Accessories

You can buy accessories from the after-sales service, from specialist retailers or online. Only use original accessories, as these have been specifically designed for your appliance.
Accessories vary from one appliance to another. When purchasing accessories, always quote the exact product number (E no.) of your appliance. → *Page 31*
You can find out which accessories are available for your appliance in our catalogue, in the online shop or from our after-sales service.
www.gaggenau.com

Accessories	Use
Teppan yaki made from multi-layer material CA051300	Recommended accessories for the frying sensor. For the flexible cooking zone only.
Griddle plate made from cast aluminium CA052300	Recommended accessories for the frying sensor. For the flexible cooking zone only.

8 Before using for the first time

Observe the following recommendations.

8.1 Initial cleaning

Remove any leftover packaging from the hob surface and wipe the surface with a damp cloth. You can find a list of recommended detergents on the official website www.gaggenau.com.
More information on care and cleaning. → *Page 27*

8.2 Cooking with induction

In comparison to conventional hobs, induction technology brings with it a series of changes and has a number of benefits such as time savings when cooking and frying, energy savings as well as greater ease of cleaning and care. It also offers improved heat control as the heat is generated directly in the cookware.

8.3 Cookware

You can find a list of recommended cookware on the official website www.gaggenau.com.
Further information on suitable cookware. → *Page 6*

8.4 Setting up Home Connect

- Set up Home Connect.
  → *"Home Connect ", Page 20*

8.5 Colour shades of the illuminated rings

The illuminated ring on the control knob lights up orange during operation. You can choose between two colour shades.
You can change the colour shades so that all of the illuminated rings across several appliances light up in the same shade.
→ *"Changing the colour of the illuminated ring", Page 12*

9 Basic operation

9.1 Switching on the hob

Note: If there is no cookware on the cooking zone or if the appliance does not detect the cookware, the selected power level flashes and the illuminated ring on the control knob lights up orange. After approx. 9 minutes, the appliance switches the cooking zone off. The illuminated ring on the control knob flashes. Turn the control knob to 0; the illuminated ring on the control knob goes out.

1. Use cookware with a suitable diameter.
   → *"Suitable cookware", Page 6*
   – Ensure that the base of the cookware sits within the marked hotplates.
2. Push in the control knob ① and turn it to the required power level ②.

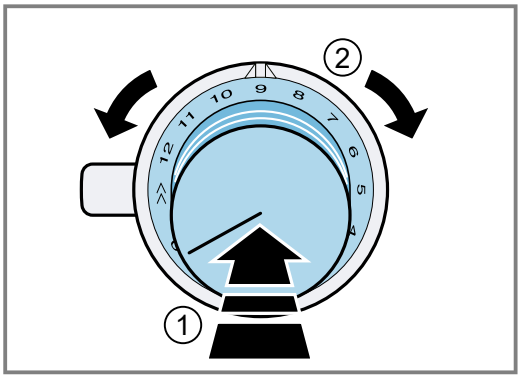

✔ The selected power level lights up on the display.
✔ The illuminated ring on the control knob lights up.

Notes

- In order to protect the appliance's electronic parts from overheating or surge currents, the hob may temporarily reduce the power level.
- In order to prevent the appliance from producing excess noise, the hob may temporarily reduce the power level.

9.2 Switching off the hob

▸ Turn the control knob to 0.
✔ The residual heat indicator lights up and the illuminated ring on the control knob flashes orange until the cooking zone has cooled down.

9.3 Cooking tips

- When heating up puree, cream soups or thick sauces, stir occasionally.
- To preheat, set power level 10 to 12.
- When cooking with the lid on, reduce the power level as soon as you see steam escaping. The cooking result is not affected by the steam escaping.
- After cooking, place a lid on the cookware until you serve the dish.
- To cook with the pressure cooker, observe the manufacturer's instructions.
- Do not cook food for too long, otherwise nutrients will be lost. The kitchen timer enables you to set the optimal cooking time.
- Ensure that the oil does not smoke.
- To brown the food, fry it in small portions, one after the other.
- Some items of cookware may reach high temperatures while the food is cooking. You should therefore use oven gloves.
- You can find recommendations for energy-efficient cooking under
  → *"Saving energy", Page 6*

Cooking recommendations

The overview shows which power level is suitable for which food. The cooking time may vary depending on the type, weight, thickness and quality of the food.

Power level	Cooking methods	Examples
11-12	Parboiling Searing Heating Bringing to the boil Blanching	Water Meat Fat or oil, liquids Soups, sauces Vegetables
7-10	Frying	Meat, potatoes
6-8	Frying	Fish

Power level	Cooking methods	Examples
8-9	Baking	Pastries or egg dishes, e.g. pancakes
8-9	Cooking without the lid	Pasta, liquids
7-8	Browning Roasting Rendering Reducing	Flour, onions Almonds, breadcrumbs Bacon Stocks, sauces
6-7	Poaching without the lid	Dumplings, soup ingredients, soup meat, poached eggs
5-6	Poaching without the lid	Boiled sausages
6-7	Steaming Stewing Braising	Vegetables, potatoes, fish Vegetables, fruit, fish Roulade, roasts, vegetables
3-4	Braising	Goulash
4-5	Cooking with the lid on	Soups, sauces
3-4	Defrosting Soaking Thickening	Frozen products Rice, pulses, vegetables Egg dishes, e.g. omelette
1-2	Heating or keeping warm	Soup, vegetables in sauce
1	Heating or keeping warm Melting	Stew Butter, chocolate

9.4 Changing the colour of the illuminated ring

Note: The illuminated ring on the control knob lights up orange during operation. You can choose between a lighter and a darker orange.

1. Carry out the following operating steps without interruption.
2. Push in one of the control knobs and turn it anti-clockwise to ≫ ①.

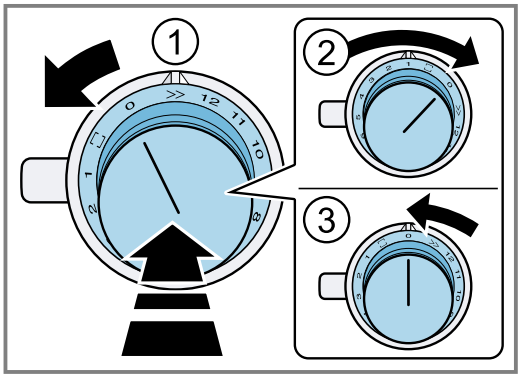

Leave the control knob pushed in.

3. Turn the same control knob clockwise to 1 ②.
Leave the control knob pushed in.
4. Turn the control knob anti-clockwise to 0 ③.

✔ 🔧 lights up.

✔ The illuminated ring on the control knob lights up yellow.

✔ The menu for changing from orange is open.

5. Push in the control knob and turn it clockwise to ⬚.

✔ After approx. 5 seconds, the illuminated ring on the control knob lights up green.

✔ The colour has changed.

Changing the colour back

Requirement: You are in the menu for changing the orange colour.

→ *"Changing the colour of the illuminated ring", Page 12*

▸ To change the setting back, push in the control knob and turn it anti-clockwise to 0 and back to ⬚.

✔ The illuminated ring on the control knob lights up yellow.

Exiting the menu and saving the settings

1. Push in the control knob and turn it anti-clockwise to ≫.
Leave the control knob pushed in.
2. Turn the control knob clockwise to 1.
Leave the control knob pushed in.
3. Turn the control knob anti-clockwise to 0.

✔ The illuminated ring on the control knob goes out.

✔ The settings are saved.

10 Flex Zone

You can use the Flex cooking zone as a single cooking zone or as two independent cooking zones. The Flex cooking zone consists of four inductors. The inductors work independently of each other and only activate area of the hob that is covered by the cookware.

10.1 Cookware positions for a single cooking zone

This is where you can find an overview of the positioning of the cookware.
In order to guarantee good pot detection and heat distribution, position the cookware in the centre.

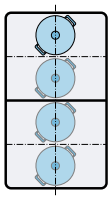	For a diameter of up to 13 cm, position the cookware on one of the four positions as shown in the illustration.
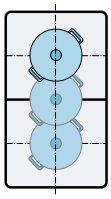	For a diameter over 13 cm, position the cookware on one of the three positions as shown in the illustration.
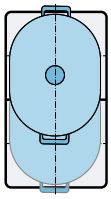	If the cookware covers more than one cooking zone, position the cookware starting on the upper or lower edge of the flexible cooking zone.

10.2 Cookware positions for two independent cooking zones

This is where you can find an overview of the positioning of the cookware.
You can use the front and rear cooking zones with two inductors each independently of each other. Set the required power level for each individual cooking zone.

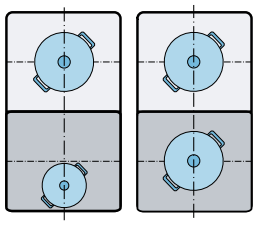	Use just one item of cookware on each cooking zone.

10.3 Using the Flex cooking zone as a single cooking zone

Requirement: The cooking zones are connected.
→ *"Connecting the two cooking zones", Page 13*

- Use the entire cooking zone.

Connecting the two cooking zones

1. Set down the cookware.
2. Turn one of the control knobs to ⊡.
3. Use the other control knob to select the power level.

✔ ⊡ lights up.
✔ The power level lights up in the displays for both cooking zones.
✔ The Flex cooking zone has been activated.

Changing the power level

- Change the power level using the same control knob that you used to select the power level.

Adding new cookware

1. Set down the new cookware.
2. The control knob is currently turned to ⊡. Turn it to 0 and then back to ⊡.

✔ The hob detects the new cookware and the heat setting that was previously selected is retained.

Note: If you move or lift the item of cookware onto the active cooking zone, the cooking zone automatically starts searching and the power level you selected previously is retained.

Separating the cooking zones

- The control knob is currently turned to ⊡. Turn it to 0.

✔ The ⊡ display lights up.
✔ The Flex cooking zone is deactivated.
✔ The two cooking zones operate as two independent cooking zones.

Note: If you switch off the cooking zone and switch it back on again, the flexible cooking zone is switched back to two independent cooking zones.

10.4 Using the Flex cooking zone as two independent cooking zones

- Use the Flex cooking zone as two independent cooking zones.
  → *"Basic operation", Page 11*

11 FlexPlus Zone

The hob has a FlexPlus cooking zone which is located between the two flexible cooking zones and which switches on with the right- or left-hand Flex cooking zone. With the FlexPlus cooking zone, you can use larger cookware and achieve improved cooking results. The FlexPlus cooking zone is always activated in conjunction with one of the two flexible cooking zones. You cannot activate the FlexPlus cooking zone and the Flex cooking zone separately.

11.1 Information on the positioning of the cookware

This is where you can find an overview of the positioning of the cookware.
Depending on the size of the cookware and the covered cooking surface, you can activate the flexible cooking zone as two independent cooking zones or as one cooking zone.
→ *"Flex Zone", Page 13*
In order to guarantee good pot detection and heat distribution, position the cookware in the centre. Ensure that the cookware covers the side cooking zone and the FlexPlus cooking zone.
Do not use the Teppan Yaki or the griddle plate with the FlexPlus cooking zone.

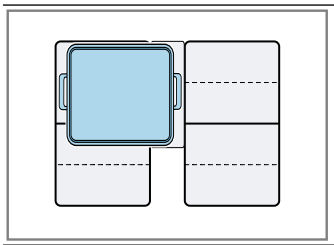	Oblong cookware: Activate the flexible cooking zone as two independent cooking zones or as a single cooking zone.
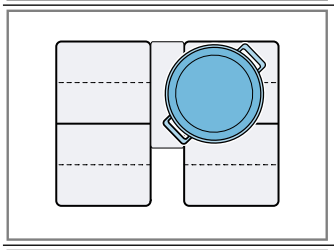	Round cookware: Activate the flexible cooking zone as a single cooking zone.
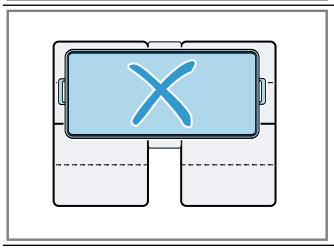	The cookware must not cover the two side cooking zones and the FlexPlus cooking zone at the same time.

11.2 Activating FlexPlus Zone

1. Place the cookware on the cooking zone.
2. Ensure that the cookware covers the FlexPlus cooking zone.

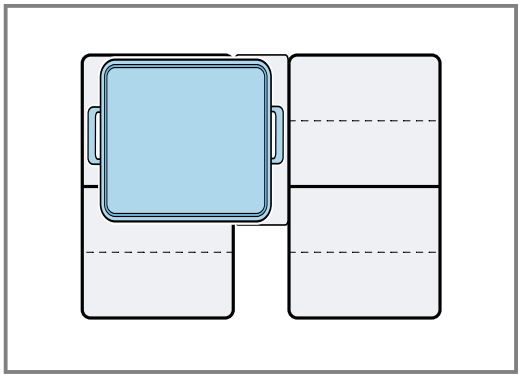

3. Select the cooking zone and the required power level.
✔ The displays for the cooking zone and the FlexPlus cooking zone light up.

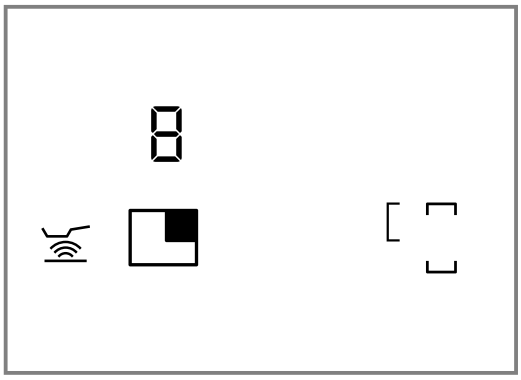

✔ The FlexPlus cooking zone is activated.
4. If the two cooking zones next to the FlexPlus cooking zone and the FlexPlus cooking zone itself are covered by cookware and the FlexPlus cooking zone display flashes, lift up the cookware.
   – Set the cookware back down on the cooking zone.
   – Select a power level.

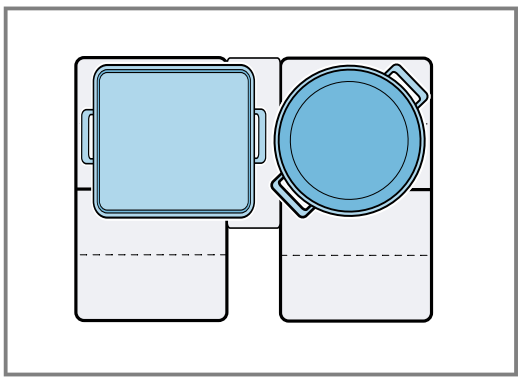

11.3 Deactivating FlexPlus Zone

▸ Remove the cookware from the cooking zone.
✔ H or h lights up.
✔ The display in the FlexPlus cooking zone lights up until the residual heat indicator goes out.
✔ The FlexPlus cooking zone is deactivated.

12 Timer function

Your appliance comes with various functions for setting the cooking time.

12.1 Kitchen timer

You can use the kitchen timer to set a time of up to 99 minutes, after which a signal sounds. The kitchen timer runs independently of all other settings and does not automatically switch off a cooking zone.

Setting the kitchen timer

1. Press ⧗.
✔ 00, — and + light up.
2. Within the next 10 seconds, use — and + to select the desired time.
   – In order to set the time more quickly, press and hold — or +.

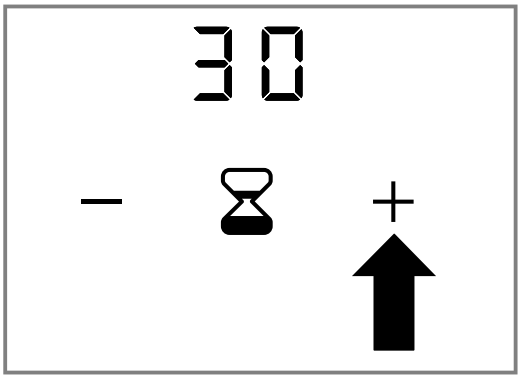

3. Press ⧗.
✔ The selected time is confirmed.
✔ The time begins to count down.

Changing the kitchen timer

1. Press ⧗.
2. Use — and + to change the time.
3. Press ⧗.
✔ The selected time is confirmed.

Deleting the kitchen timer

1. Press ⧗.
2. Use — and + to set the time to 00.
3. Press ⧗.
✔ The time is deleted.

Switching off the kitchen timer

Requirement: Once the time has elapsed, an audible signal sounds. 00 flashes.

▸ Press ⧗.
✔ The display goes out.
✔ The audible signal stops.

12.2 Stopwatch function

The stopwatch function shows the time (in minutes and seconds (mm.ss)) that has elapsed since the function was activated. The stopwatch function operates independently of all the other settings and does not automatically switch off a cooking zone.
The maximum time is 99 minutes and 59 seconds (99.59). Once this value is reached, the display goes back to 00.00.

Activating the stopwatch function

1. Select the power level.
✔ ⏱ lights up.
2. Press ⏱.
✔ 00.00 lights up.
✔ The cooking time counts down.

Interrupting the stopwatch function

1. Press ⏱.
✔ The stopwatch function is stopped.
✔ The stopwatch displays continue to light up.
2. Press ⏱.
✔ The time in the display continues to count down.

Deactivating the stopwatch function

▸ Press and hold ⏱.
✔ The stopwatch function is stopped.
✔ The stopwatch displays go out.
✔ The stopwatch function has now been deactivated.

13 Booster for pots

You can use the Booster for pots function to heat up large volumes of water more quickly than with power level 12.

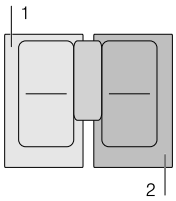

This Booster for pots function is available for all cooking zones, provided the other cooking zone is not in use. If the other cooking zone is in use, P and 12 flash. The appliance sets the power level to 12 without activating the Booster for pots function. In this case, turn the control knob for the other cooking zone to 0.

In the flexible area, the Booster for pots function is active if you use the Flex cooking zone as a single cooking zone.
→ *"Cookware positions for a single cooking zone", Page 13*

13.1 Switching on Booster for pots

- Push in the control knob ① and turn it to ≫ ②.

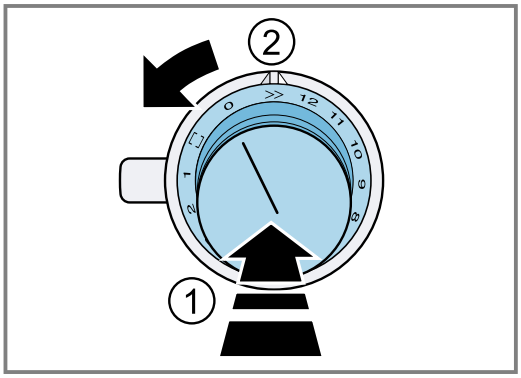

- ✔ P and ≫ light up.
- ✔ The function is activated.

13.2 Switching off Booster for pots

- Push in the control knob and turn it to the required power level.
- ✔ P and ≫ go out.
- ✔ The selected power level lights up.
- ✔ The function is deactivated.

Note: In certain circumstances, the Booster for pots function automatically switches off in order to protect the electronic elements inside the hob. In this case, the appliance automatically sets power level 12.
→ *"Deactivating Booster for pots after the safety shut-off", Page 16*

13.3 Deactivating Booster for pots after the safety shut-off

Requirement: The appliance has automatically set power level 12.

- Turn the control knob to 0 or a required power level.

14 Frying sensor function

If you are frying food, use this function to maintain the suitable pan temperature. The cooking zones that have this function are identified by the roasting sensor function symbol.

14.1 Advantages when frying

- The cooking zone only continues heating for as long as this is necessary to maintain the temperature. This saves energy and prevents the oil or fat from overheating.
- The frying sensor function reports when the empty frying pan has reached the optimum temperature for adding oil and then for adding the food.

Notes

- Do not place a lid on the pan. Otherwise, the function is not activated correctly. Use a splatter guard to prevent fat from spitting out.
- Use oil or fat that is suitable for stir fries. If you are using butter, margarine, cold-pressed olive oil or lard, use temperature setting 1 or 2.
- Never leave a frying pan unattended during heating, regardless of whether or not it contains food.
- If the cooking zone is a higher temperature than the cookware or vice versa, the frying sensor is not activated correctly.

14.2 Temperature levels

Levels		Suitable for
1	Very low	Preparing and reducing sauces, stewing vegetables and frying food in extra virgin olive oil, butter or margarine.
2	Low	Frying food in extra virgin olive oil, butter or margarine, e.g. omelettes.
3	Low - Medium	Frying fish and thick food such as meatballs and sausages.
4	Medium - High	Frying steaks (medium or well done), breaded frozen products, and thin food such as schnitzel, strips of meat and vegetables.
5	High	Frying food at high temperatures, e.g. rare steaks, potato fritters and fried potatoes.

14.3 Suitable cookware

Select the cooking zone that best matches the diameter of the base of the cookware. Place the cookware in the centre of the cooking zone.
You can purchase pans that are specially adapted for use with the frying sensor. These special accessories can be purchased from specialist retailers or through our technical customer service.

Note: Not all special accessories are suitable for every appliance. When purchasing accessories, always quote the exact product number (E no.) of your appliance. You can find more information about this under Customer service.
→ *"Customer Service", Page 31*

Optional accessories	
Frying pan, 15 cm diameter	Recommended accessory for the frying sensor.
Frying pan, 19 cm diameter	Recommended accessory for the frying sensor.
Frying pan, 21 cm diameter	Recommended accessory for the frying sensor.
Frying pan, 28 cm diameter	Recommended accessory for the frying sensor. Recommended for the 28 cm cooking zone, the three-ring cooking zone and the FlexPlus cooking zone only.

These frying pans have a non-stick coating so that you can fry food with only a small amount of oil.

Notes

- The frying sensor has been configured specifically for this type of frying pan.
- Other types of frying pan may overheat. They may reach a temperature above or below the selected temperature setting. Try the lowest temperature setting first and change this if necessary.
- The frying sensor may not be activated on the flexible cooking zone if the frying pan does not match the size of the hotplate or if it is positioned incorrectly.
  You can find additional information about this in section
  → *"Flex Zone", Page 13*.

14.4 Recommendations for cooking with the frying sensor

The overview shows which temperature level 🌡 is suitable for which food. The frying time ◷ min may vary depending on the type, weight, thickness and quality of the food.
The set temperature level varies depending on the pan that is used. Preheat the empty pan. Add oil and the food after the signal tone sounds.

	🌡	◷ min
Meat		
Escalope, plain	4	6-10
Escalope, breaded	4	6-10
Fillet	4	6-10
Chops [1]	3	10-15
Cordon bleu [1]	4	10-15
Steak, rare, 3 cm thick	5	6-8
Steak, medium, 3 cm thick	4	8-12
Steak, well done, 3 cm thick	4	8-12
Poultry breast, 2 cm thick [1]	3	10-20
Sausages, pre-boiled or raw [1]	3	8-20
Hamburgers, rissoles [1]	3	6-30
Strips of meat, gyros	4	7-12
Minced meat	4	6-10
Bacon	2	5-8
Fish		
Fish, fried, e.g. trout	3	10-20
Fish fillet, plain	3-4	10-20
Fish fillet, breaded	3-4	10-20
Scampi	4	4-8
Prawns	4	4-8
Egg dishes		
Pancakes [2]	5	1.5-2.5
Omelette [2]	2	3-6
Fried eggs	2-4	2-6
Scrambled eggs	2	4-9
Kaiserschmarrn (Austrian pancake)	3	10-15
French toast [2]	3	4-8
Potatoes		
Fried potatoes, boiled in their skin	5	6-12
Fried potatoes, from raw potatoes	4	15-25
Potato pancakes [2]	5	2.5-3.5
Swiss rösti	2	50-55
Glazed potatoes	3	15-20
Vegetables		
Garlic, onions	1-2	2-10
Courgettes, aubergines	3	4-12
Peppers, green asparagus	3	4-15
Braising vegetables (fried in fat but with no water added), e.g. courgettes, green peppers	1	10-20
Mushrooms	4	10-15
Glazed vegetables	3	6-10
Fried onions	3	5-10
Frozen products		
Escalope	4	15-20
Cordon bleu [1]	4	10-30
Poultry breast [1]	4	10-30
Chicken nuggets	4	10-15
Gyros	4	10-15
Kebab	4	10-15
Fish fillet, plain	3	10-20
Fish fillet, breaded	3	10-20
Fish fingers	4	8-12
Chips	5	4-6
Stir-fried meals, e.g. fried vegetables with chicken	3	6-10
Spring rolls	4	10-30
Camembert/cheese	3	10-15
Sauces		
Tomato sauce with vegetables	1	25-35
Béchamel sauce	1	10-20
Cheese sauce, e.g. Gorgonzola sauce	1	10-20
Reduced sauces, e.g. tomato sauce, Bolognese sauce	1	25-35
Sweet sauces, e.g. orange sauce	1	15-25
Miscellaneous		
Camembert/cheese	3	7-10
Dried instant meals to which water is added, e.g. pasta dishes	1	5-10

[1] Turn frequently.
[2] Cooking time per serving. Fry one portion after the other.

	🌡	◷ min
Croutons	3	6-10
Almonds/walnuts/pine nuts	4	3-15

[1] Turn frequently.
[2] Cooking time per serving. Fry one portion after the other.

14.5 Switching on the Frying Sensor

1. Place the cookware in the centre of the cooking zone.
   – Ensure that the diameter of the cookware base matches the size of the hotplate.
2. Push in the control knob ① and select the required temperature level ②.
   → *"Recommendations for cooking with the frying sensor", Page 17*

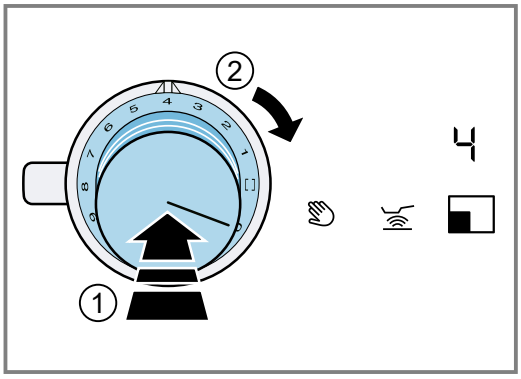

For this function, the temperature levels 1 to 5 are available.
→ *"Temperature levels", Page 16*
If you select a temperature setting above 5, the appliance automatically sets the temperature level 5.

3. Press .
   ✔ lights up orange.
   ✔ and the selected temperature level light up.
   ✔ The function is activated.
   ✔ , or and the temperature setting you have selected will remain lit until the frying temperature has been reached.
   ✔ Once the set temperature is reached, a signal tone sounds and the temperature display goes out.
4. Once the frying temperature has been reached, add the oil and then the food to the pan.
5. Turn the food so that it does not burn.

14.6 Switching off Frying Sensor

- Turn the control knob that you used to select the temperature to 0.
- ✔ The cooking zone is switched off.
- ✔ The residual heat indicator lights up.

15 Locking the control panel for cleaning

You can use this function to lock the control panel for cleaning for a short time. You can remove liquids that have boiled over without changing the settings you have selected on the activated hob.
The function has no effect on the control knob. You can switch off the appliance at any time. The power supply to the appliance is interrupted while the lock is on. The cooking zones may still be hot.

15.1 Activating the control panel lock for cleaning

- Press .

The power supply to the appliance is interrupted while the lock is on. The cooking zones may still be hot.
- ✔ A signal tone sounds.
- ✔ The displays for the previously activated functions flash.
- ✔ The control panel is locked for 10 minutes.
- ✔ The appliance switches off if you do not deactivate the function within the next 10 minutes.

15.2 Deactivating the lock on the control panel for cleaning purposes

- Press .
- ✔ The function has now been deactivated.

16 Automatic switch-off

If you operate a cooking zone for an extended period and do not change any settings, the automatic safety shut-off is activated. Depending on which performance level has been selected, the cooking zone switches off automatically after 1 to 10 hours.
A signal tone indicates that the time has elapsed. The illuminated ring on the control knob flashes orange and white. The cooking zone stops heating. F8 lights up.

16.1 Switch-on time depending on the power levels

The following overview displays the number of hours after which the hob is switched off, depending on the selected power level.

Power level	Time
1	10 hours
2-4	5 hours
5-7	4 hours
8	3 hours
9-10	2 hours
11-12	1 hour

If you activate the frying sensor, the hob switches off at power levels 1 to 5 after 3 hours.

16.2 Switching the appliance back on after automatic switch-off

1. Turn the control knob to 0.
2. Turn the control knob for the required cooking zone to the power level.

17 Basic settings

You can configure the basic settings for your appliance to meet your needs.

17.1 Overview of the basic settings

This is where you can find an overview of the basic settings and the factory preset values.
The display shows the settings c5, c6, c7 and c8 only if the appliance is connected to an extractor hood.
The display shows the settings c7 and c8 only if the appliance is connected to an extractor hood with lighting.

Indicator	Selection
c1	Signal tones ON All signal tones are switched on.[1] OFF Only the fault signal is switched on.
c2	Power management function. Limit the total power of the hob. The available settings depend on the maximum power of the hob. OFF Deactivated.[1] 1000 Lowest level. 1500 2000 ... 9500 Highest level for the hob.
c3	Check the cookware; cooking results → *"Cookware test", Page 26* 0 Not suitable. 1 Not perfect. 2 Suitable.
c4	Restore to standard settings OFF Individual settings.[1] ON Restore factory settings.
c5	Extractor hood starts automatically OFF Switched off. The extractor hood must be switched on manually, if required. A Switched on in automatic mode.[1] In automatic mode, the extractor hood switches itself on when one of the cooking zones is switched on. 1/2/3 Switched on in manual mode. The extractor hood is switched on with a fixed power level when a cooking zone is switched on.
c6	Fan run-on OFF The extractor hood switches itself off with the hob. Not recommended for extractor hoods with air recirculation. r Fan run-on in automatic mode.[1] no Fan run-on with last selected setting.
c7	Switching the extractor hood light on automatically OFF Switched off.[1] ON Switched on. The light switches itself on when the hob is switched on.
c8	Switching the extractor hood light off automatically OFF Switched off.[1] The light switches itself off when you switch off the hob. ON Switched on. The lighting switches itself on when you switch off the hob. run Switched on. The light switches itself on when the fan runs on and goes out when the fan run-on time ends.

[1] Factory setting

17.2 Opening the basic settings menu

Requirement: The hob is switched off.

1. Push the control knob in. While the control knob is pushed in, carry out the following steps without interruption:
   - Turn the control knob one notch anti-clockwise to position ≫ ①.
   - Turn the control knob three notches clockwise to position 1 ②.
   - Turn the control knob two notches anti-clockwise to position 0 ③.

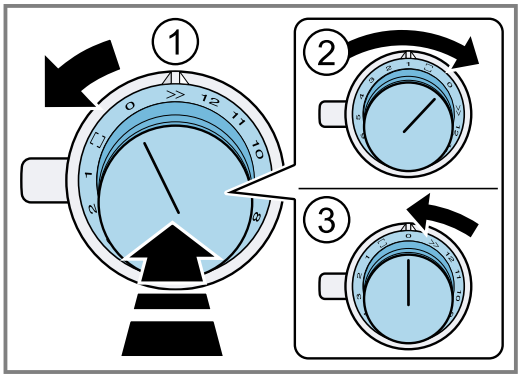

✔ 🔧 lights up.
✔ The illuminated ring on the control knob lights up yellow.

2. Press 🔧.
   The displays show the product information.

Product information	Indicator
Customer Service Index (CSI)	01
Production number	Fd
Production number 1	95.
Production number 2	05

3. Press 🔧 again.
✔ The basic settings menu is opened.
✔ c1 and 0n light up.
4. Press 🔧 repeatedly until the desired function is shown on the display.
5. Use + and — to select the required setting.
6. Press and hold 🔧 for at least 4 seconds.
✔ The settings are saved.
7. Exit the basic settings menu → *Page 20*.

17.3 Exiting the basic settings menu

▸ Push the control knob in. While the control knob is pushed in, carry out the following steps without interruption:
   - Turn the control knob one notch anti-clockwise to position ≫ ①.
   - Turn the control knob three notches clockwise to position 1 ②.
   - Turn the control knob two notches anti-clockwise to position 0 ③.

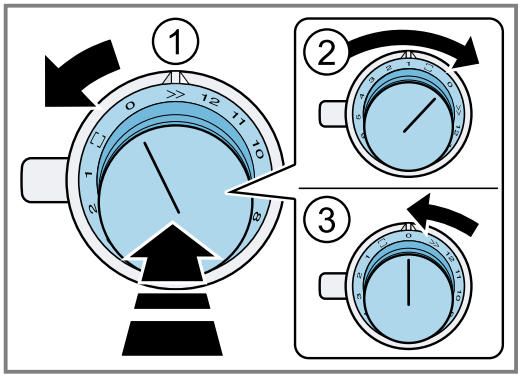

✔ 🔧 goes out.
✔ The illuminated ring on the control knob goes out.

18 Home Connect

This appliance can be networked. Connecting your appliance to a mobile device lets you control its functions via the Home Connect app, adjust its basic settings and monitor its current operating status. It is not possible to perform a remote start or set a power level.
The Home Connect services are not available in every country. The availability of the Home Connect function depends on the availability of Home Connect services in your country. You can find information about this at: www.home-connect.com.

The Home Connect app guides you through the entire login process. Follow the instructions in the Home Connect app to configure the settings.

Tips
- Please consult the documents supplied by Home Connect.
- Please also follow the instructions in the Home Connect app.

Notes
- Please note the safety precautions in this instruction manual and make sure that they are also observed when operating the appliance via the Home Connect app.
  → *"Safety", Page 3*
- Operating the appliance on the appliance itself always takes priority. During this time it is not possible to operate the appliance using the Home Connect app.
- In networked standby mode, the appliance requires a maximum of 2 W.
- Hobs are not designed to be left unattended. Always monitor the cooking process.

18.1 Home Connect settings

Adapt Home Connect to your needs.
You can find the Home Connect settings in the basic settings for your appliance. Which settings the display shows will depend on whether Home Connect has been set up and whether the appliance is connected to your home network.

18.2 Setting up

To configure settings via Home Connect, install the Home Connect app on your mobile device and set it up.
Connect your appliance to the home network (i.e. the router) and to the Home Connect app (on a mobile device, e.g. a smartphone or tablet).
You can connect your appliance to the home network manually or automatically. Establish the connection to the home network and then the connection to the Home Connect app.
The app will guide you through the entire registration process. In case of doubt, follow the instructions in the app.

Setting up Home Connect

Requirements

- The appliance is connected to the power supply and is switched on.
- You have a mobile device with a current version of the iOS or Android operating system, e.g. a smartphone.
- The mobile device and the appliance are within range of your home network's Wi-Fi signal.

1. Download the Home Connect app.

GET IT ON Google Play

Download on the App Store

2. Open the Home Connect app and scan the following QR code.
3. Follow the instructions in the Home Connect app.

18.3 Opening or closing the Home Connect settings menu

In the Home Connect settings menu, you can connect your appliance to Home Connect and implement the settings for connecting to the Wi-Fi home network.

1. Push in any control knob. While the control knob is pushed in, carry out the following steps without interruption:
   - Turn one notch anti-clockwise to ≫ ①.
   - Turn the control knob two notches clockwise to ⛶ ②.
   - Turn the control knob one notch anti-clockwise to 0 ③.

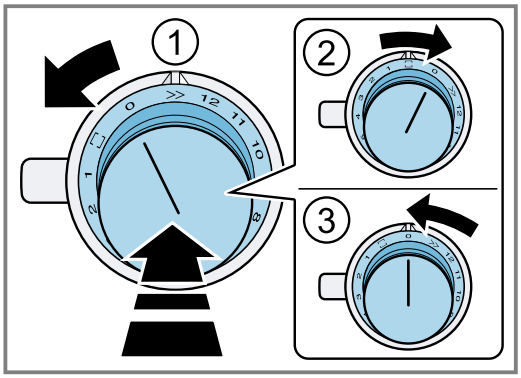

✔ The illuminated ring on the control knob lights up blue.

2. In order to implement a setting, turn the control knob to the required position.
   → *"Overview of the Home Connect settings", Page 22*
3. To save the setting, exit the Home Connect settings menu in the same way.
   - Turn one notch anti-clockwise to ≫ ①.
   - Turn the control knob two notches clockwise to ⛶ ②.
   - Turn the control knob one notch anti-clockwise to 0 ③.

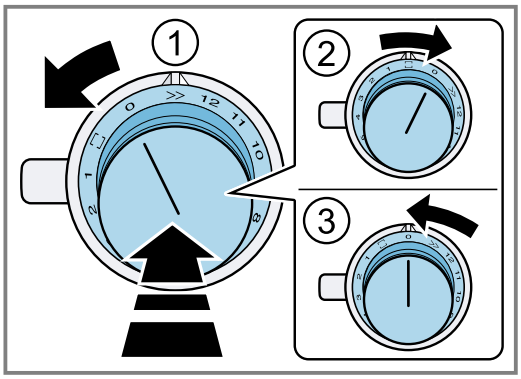

Displays on the illuminated ring on the control knob

The following displays on the illuminated ring are possible in conjunction with Home Connect.

Display	Meaning
Light up: Blue	You are in the Home Connect menu.
Flash: Blue	The appliance is establishing a connection to the home network.

Display	Meaning
Light up: Green	The appliance has established a connection to the home network.

Display	Meaning
Light up: Red	The appliance was unable to establish a connection to the home network.

18.4 Overview of the Home Connect settings

In the Home Connect settings, you can adjust settings and network settings for Home Connect.

Knob position	Setting	Use
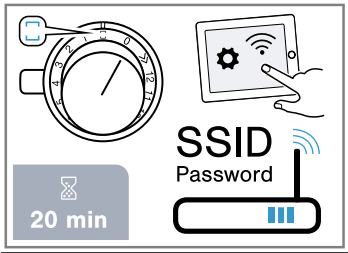	Manual login in the Wi-Fi home network	To log in manually, you require the network name (SSID) and password (key) for your Wi-Fi home network. On your mobile device, the Home Connect Wi-Fi connection is available for approximately 20 minutes.
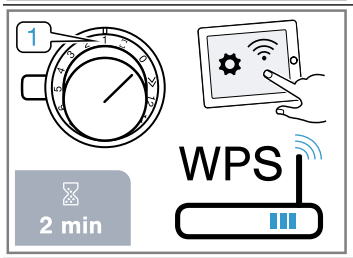	Automatic login in the Wi-Fi home network	Login to the Wi-Fi home network with a WPS-enabled router
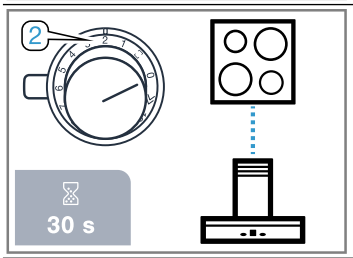	Direct connection to an extractor hood	You can connect the hob directly to a compatible extractor hood.
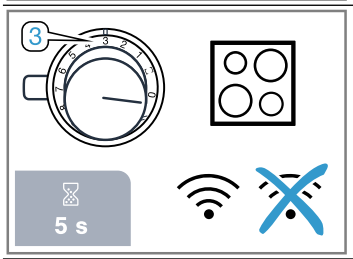	Switching the Wi-Fi on or off	You can switch off the Wi-Fi connection on your hob at any time, e.g. to save energy during a holiday. The connections to the home network and to the extractor hood remain saved. When you switch the Wi-Fi back on, the saved connections are applied.
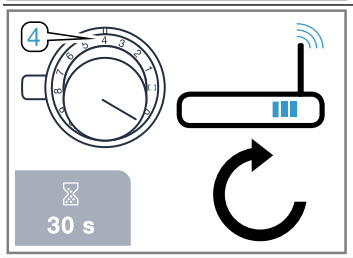	Resetting the Home Connect connection	You can delete all of the settings for Home Connect, e.g. if you have new access data for your router.

18.5 Connecting the appliance to your home network (Wi-Fi)

1. Carry out the following operating steps without interruption.
2. Open the Home Connect settings menu.
   → *"Opening or closing the Home Connect settings menu", Page 21*

✔ The illuminated ring on the control knob lights up blue.

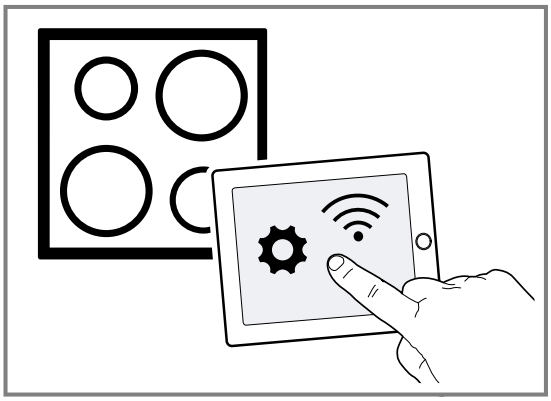

18.6 Manual registration in the home network

Note: To log in to the home network (Wi-Fi) manually, you require the network name (SSID) and password (key) for your home network.

1. Turn the control knob clockwise to ⊡.
✔ After approx. 5 seconds, the illuminated ring on the control knob flashes blue and yellow alternately.
✔ CON 2 lights up.
✔ The appliance is in manual mode.
2. Switch to the general settings menu of your mobile device and call up the Wi-Fi settings.
On your mobile device, the Home Connect Wi-Fi connection is available for approximately 20 minutes.
3. Connect to the Home Connect Wi-Fi connection.
The password is: Home Connect.
4. Launch the Home Connect app on your mobile device and follow the instructions for network login.
5. Enter the password (key) of the home network.
✔ Following successful connection to the router, the illuminated ring on the control knob lights up green for approx. 3 seconds.
✔ PAI and ⊛ light up.
✔ The illuminated ring on the control knob flashes blue and white alternately. The appliance establishes the connection to the mobile device.
✔ Once the illuminated ring around the control knob lights up green, the appliance is available in the app on the mobile device. If the illuminated ring around the control knob lights up red, it was not possible to establish a connection.
6. To save the connection, exit the Home Connect settings menu.
→ *"Opening or closing the Home Connect settings menu", Page 21*

Connection to the router unsuccessful

1. If a connection could not be established, check the router and turn the control knob to another position and then back to ⊡.
✔ The illuminated ring on the control knob lights up blue.
✔ After approx. 5 seconds, the illuminated ring on the control knob flashes blue and yellow alternately.
✔ CON 2 lights up.
2. Switch to the general settings menu of your mobile device and start the Wi-Fi connection again.
3. Check that the password has been entered correctly.

Connection to the mobile device unsuccessful

1. If a connection could not be established, turn the control knob to another position and then back to ⊡.
✔ The illuminated ring on the control knob lights up blue.
✔ After approx. 5 seconds, the illuminated ring on the control knob flashes blue and white.
✔ PAI lights up.
2. Launch the Home Connect app on your mobile device and follow the instructions for automatic network login.

Connecting more mobile devices to the same Home Connect account

▸ In the Home Connect app, you can connect more mobile devices to your appliance if required.

Connecting more mobile devices to another Home Connect account

Requirement: A mobile device is connected to the appliance. The appliance is in the Home Connect settings menu.

1. Turn the control knob to another position and then back to ⊡.
✔ The illuminated ring on the control knob flashes blue and white.
✔ PAI lights up.
✔ The appliance is ready to connect to another mobile device.
2. Launch the Home Connect app on your mobile device and follow the instructions for automatic network login.
✔ Once the illuminated ring around the control knob lights up green, the appliance is available in the app on the mobile device.

18.7 Logging in to your home network automatically (WPS)

Requirement: You require a router that has WPS functionality. You will find information about this in the manual for your router. You require access to your router. If this is not the case, follow the steps in
→ *"Manual registration in the home network", Page 23*.

1. Push in the control knob and turn it to 1.
✔ During the connection process, the illuminated ring around the control knob flashes blue and yellow alternately.
✔ CON 1 lights up.
2. Press the WPS button on the router within the next 2 minutes.
✔ Following successful connection to the router, the illuminated ring on the control knob lights up green for approx. 3 seconds. The illuminated ring on the control knob then flashes blue and white alternately.
✔ PAI lights up.
✔ The appliance is ready to connect to your mobile device.
3. Launch the Home Connect app on your mobile device and follow the instructions for automatic network login.

- ✔ Once the illuminated ring around the control knob lights up green, the appliance is available in the app on the mobile device.
- ✔ ⌔ lights up.
- ✔ If the illuminated ring around the control knob lights up red, it was not possible to establish a connection.

4. To save the connection, exit the Home Connect settings menu.
→ *"Opening or closing the Home Connect settings menu", Page 21*

Connection to the router unsuccessful

1. If a connection could not be established, check the router and turn the control knob to another position and then back to 1.
- ✔ The illuminated ring on the control knob lights up blue.
- ✔ After approx. 5 seconds, the illuminated ring on the control knob flashes blue and yellow alternately.
- ✔ CON 1 lights up.

2. Switch to the general settings menu of your mobile device and start the Wi-Fi connection again.

Connection to the mobile device unsuccessful

1. If a connection could not be established, turn the control knob to another position and then back to 1.
- ✔ The illuminated ring on the control knob lights up blue.
- ✔ After approx. 5 seconds, the illuminated ring on the control knob flashes blue and white.
- ✔ PA1 lights up.

2. Launch the Home Connect app on your mobile device and follow the instructions for automatic network login.

Connecting more mobile devices to the same Home Connect account

- ▸ In the Home Connect app, you can connect more mobile devices to your appliance if required.

Connecting more mobile devices to another Home Connect account

Requirement: A mobile device is connected to the appliance. The appliance is in the Home Connect settings menu.

1. Turn the control knob to another position and then back to 1.
- ✔ The illuminated ring on the control knob flashes blue and white.
- ✔ CON 1 lights up.
- ✔ The appliance is ready to connect to another mobile device.

2. Launch the Home Connect app on your mobile device and follow the instructions for automatic network login.
- ✔ Once the illuminated ring around the control knob lights up green, the appliance is available in the app on the mobile device.

18.8 Exiting the Home Connect settings menu

1. Carry out the following operating steps without interruption.
2. Close the Home Connect settings menu.
→ *"Opening or closing the Home Connect settings menu", Page 21*
- ✔ The illuminated ring on the control knob goes out.

18.9 Switching Wi-Fi on or off

Notes

- ▪ You can switch off the Wi-Fi on your hob at any time, e.g. to save energy during a holiday. The connections to the home network and to the extractor hood remain saved. When you switch the Wi-Fi back on, the saved connections are applied.
- ▪ If the hob is directly connected to an extractor hood, you cannot switch the Wi-Fi off.

1. Carry out the following operating steps without interruption.
2. Open the Home Connect settings menu.
→ *"Opening or closing the Home Connect settings menu", Page 21*
- ✔ The illuminated ring on the control knob lights up blue.

3. Turn the control knob to 3.
- ✔ The illuminated ring on the control knob lights up green.
- ✔ After approx. 5 seconds, the illuminated ring on the control knob flashes blue.
- ✔ After a few seconds, the illuminated ring on the control knob lights up blue.
- ✔ The ⌔ and WIFI symbols go out on the control panel. WiFi is deactivated.

4. Close the Home Connect settings menu.
→ *"Opening or closing the Home Connect settings menu", Page 21*
- ✔ The illuminated ring on the control knob goes out.

5. If you want to switch the Wi-Fi back on, work through the same operating sequence.
- ✔ The illuminated ring on the control knob lights up blue.
- ✔ After approx. 5 seconds, the illuminated ring on the control knob flashes blue and then lights up green.
- ✔ ⌔ and WIFI light up on the control panel.

18.10 Resetting the Home Connect connection

You can reset the connections you have saved on your home network and on the hob at any time.

1. Open the Home Connect settings menu.
→ *"Opening or closing the Home Connect settings menu", Page 21*
- ✔ The illuminated ring on the control knob lights up blue.

2. Turn the control knob to 4.
- ✔ RES lights up on the control panel.
- ✔ After approx. 30 seconds, the illuminated ring on the control knob lights up green. dONE lights up on the control panel.
- ✔ The Home Connect settings have been reset. The appliance is no longer displayed in the Home Connect app.

3. Close the Home Connect settings menu.
   → *"Opening or closing the Home Connect settings menu", Page 21*
✔ The illuminated ring on the control knob goes out.

18.11 Software update

Your appliance's software can be updated using the software update function, e.g. for the purposes of optimisation, troubleshooting or security updates.
To do this, you must be a registered Home Connect user, have installed the app on your mobile device and be connected to the Home Connect server.
As soon as a software update is available, you will be informed via the Home Connect app and will be able to start the software update via the app. Once the update has been successfully downloaded, you can start installing it via the Home Connect app if you are in your home network (Wi-Fi). The Home Connect app informs you once installation is successful.

Notes

- The software update consists of two steps.
  - The first step is the download.
  - The second step is the installation on your appliance.
- You can continue to use your appliance as normal while updates are downloading. Depending on your personal settings in the app, software updates can also be set to download automatically.
- Installation takes a few minutes. You cannot use your appliance during installation.
- We recommend that you install security updates as soon as possible.

18.12 Remote diagnostics

Customer Service can use Remote Diagnostics to access your appliance if you contact them, have your appliance connected to the Home Connect server and if Remote Diagnostics is available in the country in which you are using the appliance.

Tip: For further information and details about the availability of Remote Diagnostics in your country, please visit the service/support section of your local website: www.home-connect.com.

18.13 Data protection

Please see the information on data protection.
The first time your appliance is registered on a home network connected to the Internet, your appliance will transmit the following types of data to the Home Connect server (initial registration):

- Unique appliance identification (consisting of appliance codes as well as the MAC address of the Wi-Fi communication module installed).
- Security certificate of the Wi-Fi communication module (to ensure a secure data connection).
- The current software and hardware version of your appliance.
- Status of any previous reset to factory settings.

This initial registration prepares the Home Connect functions for use and is only required when you want to use the Home Connect functions for the first time.

Note: Please note that the Home Connect functions can only be utilised with the Home Connect app. Information on data protection can be retrieved in the Home Connect app.

19 Cooktop-based Hood Control

You can connect your appliance to a compatible extractor hood and control the functions of the extractor hood via your hob.
You can connect one extractor hood to one or two hobs. You cannot connect several extractor hoods to one hob.

Notes

- Please note the safety precautions in the instruction manual for your extractor hood and ensure that they are also observed when operating the appliance via the hob-based hood control.
- Using the controls on the extractor hood always takes priority. It is not possible to use the hob-based hood control during this time.
- In networked standby mode, the appliance requires a maximum of 2 W.

You have the following options for connecting the appliances together:

- Connecting appliances via the home network
  → *Page 25*
- Connecting appliances directly → *Page 26*

19.1 Connecting appliances via the home network

If the appliances are connected to each other via your home network, both the hood controls on the hob and the Home Connect functions can be used to operate the appliance. If both appliances are Home Connect-compatible, it is possible to connect them using the Home Connect app.
Please consult the documents supplied by Home Connect.

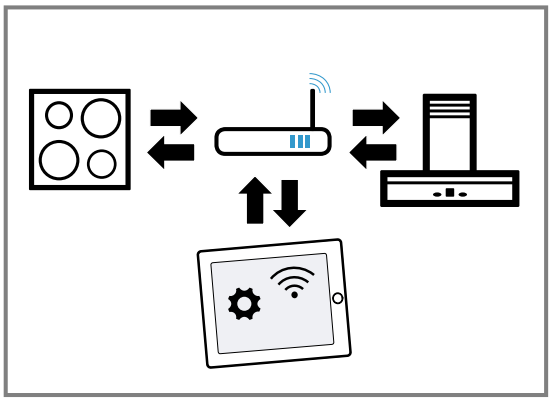

Establishing a connection via the home network

1. Open the Home Connect settings menu.
   → *"Opening or closing the Home Connect settings menu", Page 21*
2. Log in to the home network manually or automatically.
   → *"Manual registration in the home network", Page 23*
   → *"Logging in to your home network automatically (WPS)", Page 23*
3. Once the hob is connected to the home network, you can connect to the extractor hood via the Home Connect app. To do this, follow the instructions on your mobile device.

Connecting another hob to the extractor hood

1. Connect both hobs to Home Connect.
   → *"Manual registration in the home network", Page 23*
   → *"Logging in to your home network automatically (WPS)", Page 23*
2. Connect the extractor hood to Home Connect.
   – Follow the instructions in the user manual for your extractor hood.
3. In the Home Connect app, connect the first hob to the extractor hood.
4. In the Home Connect app, connect the second hob to the extractor hood.

19.2 Connecting appliances directly

If the appliance is connected directly to an extractor hood, it cannot be connected to your home network as well. The appliance functions in the same way as a hob with no network connection and can still be operated via the control panel.
Before connecting the appliances, reset all existing connections to the home network or other appliances.

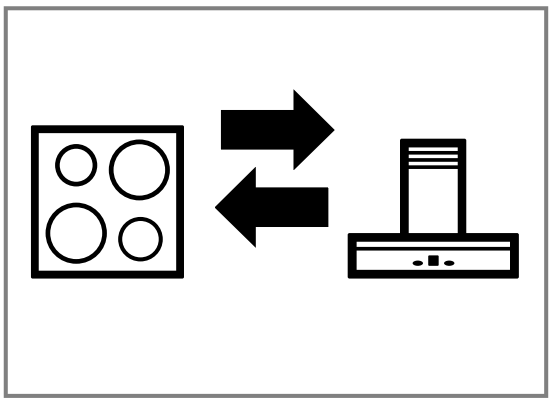

Establishing a direct connection

Requirement: Make sure that the extractor hood is switched on and is in search mode. Search mode means that the connection process on the extractor hood has been started. Refer to the user manual for your extractor hood for more information.

1. Open the Home Connect settings menu.
   → *"Opening or closing the Home Connect settings menu", Page 21*
2. Turn the control knob clockwise to 2.
   ✔ After approx. 5 seconds, the illuminated ring on the control knob flashes blue and yellow alternately.
   ✔ HHC lights up.
   ✔ The hob is connected to the extractor hood once the illuminated ring on the control knob continuously lights up green.
3. Close the Home Connect settings menu.
   → *"Opening or closing the Home Connect settings menu", Page 21*
   ✔ The illuminated ring on the control knob goes out.

Re-establishing a direct connection

Requirement: If, after around 30 seconds, a connection could not be established, the illuminated ring on the control knob lights up red.

▸ Turn the control knob to another position and then back to 2.
✔ The illuminated ring on the control knob lights up blue.
✔ After approx. 5 seconds, the illuminated ring on the control knob flashes blue and yellow alternately.
✔ The appliance attempts to establish a connection again.

Connecting another hob to the extractor hood

▸ In order to connect another hob to the extractor hood, run through the direct connection again with the second hob.
→ *"Establishing a direct connection", Page 26*

19.3 Controlling the extractor hood via the hob

In the Home Connect app, you can adjust the behaviour of your extractor hood depending on whether the hob or individual cooking zones are switched on or off.

20 Cookware test

The quality of the cookware has a major influence on the speed and the result of the cooking process.
You can use this function to test the quality of the cookware.
Before the test, ensure that the diameter of the cookware base corresponds to the diameter of the cooking zone being used.
Access is via the basic settings. → *Page 19*

Notes

- If the cooking zone is much smaller than the diameter of the cookware, only the middle of the cookware heats up. The cooking result is not optimum.
- The flexible cooking zone is set to function as a single cooking zone; check only one item of cookware.
- Do not use the wok and wok accessories for this function.

- You can find information on the type and size of the cookware in
  → *"Suitable cookware", Page 6*.

20.1 Checking the cookware

1. At room temperature, place the cookware with approx. 200 ml water in the centre of the cooking zone whose diameter best fits the diameter of the base of the cookware.
2. Open the basic settings menu. → *Page 19*
3. Select the c3 setting.
✔ OFF lights up.
4. Press + or −.
✔ ON lights up.
✔ A signal tone sounds.
✔ The displays for the cooking zones light up.
✔ The function is activated.
✔ run lights up.
✔ After a few seconds, the results for the quality and speed of the cooking process are displayed.

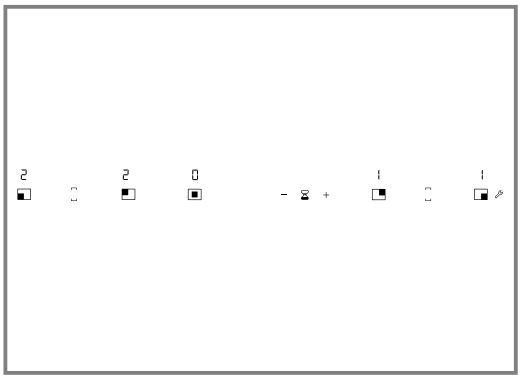

5. If necessary, repeat the test using + or −.

20.2 Checking the result

▸ Check the quality result and the speed of the cooking process using the following overview.

Display	Result
0	The cookware is not suitable for the cooking zone and therefore does not heat up.[1]
1	The cookware is taking longer to heat up than expected and cooking is not progressing as well as it ought to.[1]
2	The cookware is heating up correctly and cooking is progressing well.

[1] If a smaller cooking zone is available, test the cookware on this cooking zone.

21 Cleaning and servicing

To keep your appliance working efficiently for a long time, it is important to clean and maintain it carefully.

21.1 Cleaning products

You can obtain suitable cleaning products and glass scrapers from customer service, the online shop or a retailer.

ATTENTION!
Unsuitable cleaning products may damage the surfaces of the appliance.
▸ Never use unsuitable cleaning products.
▸ Do not use cleaning products while the hob is still hot. This may cause marks on the surface.

Unsuitable cleaning products
- Undiluted detergent
- Detergent intended for dishwashers
- Abrasive cleaners
- Aggressive cleaning products such as oven spray or stain remover
- Abrasive sponges
- High-pressure or steam jet cleaners

21.2 Cleaning the hob

Clean the hob after every use to stop cooking residues from getting burnt on.

Requirement: The hob must be cold. Do not allow the hob to cool down if it has sugar stains, rice starch, plastic or aluminium foil on it.

1. Remove heavy soiling using a glass scraper.
2. Clean the hob with a cleaning agent for glass ceramic.
   Follow the cleaning instructions on the packaging of the cleaning agent.

   Tips
   - You can achieve good cleaning results using a special sponge for glass ceramic.
   - If you keep the base of the cookware clean, the hob surface remains in a good condition.

21.3 Cleaning the hob surround

If the hob frame is dirty or stained after use, clean this.

Note: Do not use a glass scraper.

1. Clean the hob frame with hot soapy water and a soft cloth.
   Wash new sponge cloths thoroughly before use.
2. Dry with a soft cloth.

21.4 Cleaning the control knob

Notes

- Do not use a glass scraper.
- You cannot remove the knob for cleaning.
- Lemon and vinegar are not suitable for cleaning and may create dull patches.

1. Clean the control knob with warm soapy water and a soft cloth.
2. Do not use too much water when cleaning.

22 FAQs

This is where you can find an overview of the frequently asked questions regarding use, noises, cookware and cleaning.

22.1 Noises

Question	Answer
Why can I hear noises while I'm cooking?	■ Noises may be generated while using the hob depending on the base material of the cookware. These noises are normal for induction technology. They do not indicate that there is a fault.
Possible noises	■ **A deep humming noise similar to a transformer:** Occurs when cooking at a high power level. This noise disappears or becomes quieter when you reduce the power level. ■ **A quiet whistling noise:** This can be heard when the cookware is empty. This noise disappears when you add water or food to the cookware. ■ **Crackling:** This noise occurs when the cookware is made from different multilayer materials, or if you use cookware of different sizes and different materials. The loudness of the noise can vary depending on the quantity of food being cooked or the cooking method. ■ **Fan noises:** The hob is equipped with a fan that switches on automatically at high temperatures. The fan may also continue to run after you have switched the hob off if the temperature measured is still too high. ■ **Loud whistling noises:** These may arise if you are operating two cooking zones at the same time and at the maximum power level. These whistling noises disappear or become quieter when you reduce the power level.

22.2 Cookware

Question	Answer
Which cookware is suitable for the induction hob?	■ You can find more information on which items of cookware are compatible with induction cooking in → *"Suitable cookware", Page 6*.
Why is the cooking zone not heating up and why is the heat setting flashing?	■ The cookware is on a different cooking zone to the one that has been switched on. Ensure that you have switched on the correct cooking zone for the cookware. ■ The cookware is too small for the cooking zone that is switched on or it is not suitable for induction cooking. Ensure that the cookware is suitable for induction cooking and that it is placed on the cooking zone which best corresponds to its size. You can find more information about this under → *"Suitable cookware", Page 6*.
Why is it taking so long for the cookware to heat up or why is it not heating up sufficiently despite being on a high power setting?	■ The cookware is too small for the cooking zone that is switched on or it is not suitable for induction cooking. Ensure that the cookware is suitable for induction cooking and that it is placed on the cooking zone which best corresponds to its size. You can find more information about this under → *"Suitable cookware", Page 6*.

22.3 Cleaning

Question	Answer
How can I clean the hob?	■ You can achieve the best results by using special glass-ceramic cleaning products. Do not use harsh or abrasive cleaning products, dishwater detergent (concentrated) or scouring pads. You can find more information about this under → *"Cleaning and servicing", Page 27*.

23 Troubleshooting

You can rectify minor faults on your appliance yourself. Read the troubleshooting information before contacting after-sales service. This will avoid unnecessary costs.

⚠ **WARNING – Risk of injury!**

Improper repairs are dangerous.

- ▸ Repairs to the appliance should only be carried out by trained specialist staff.
- ▸ If the appliance is defective, call Customer Service.

⚠ **WARNING – Risk of electric shock!**

Incorrect repairs are dangerous.

- ▸ Repairs to the appliance should only be carried out by trained specialist staff.
- ▸ Only use genuine spare parts when repairing the appliance.
- ▸ If the power cord of this appliance is damaged, it must be replaced with a special connection cable, which is available from the manufacturer or his Customer Service.

23.1 Warnings

Notes

- ■ If E appears in the displays, press and hold the sensor for the respective cooking zone and read the fault code.
- ■ If the fault code is not listed in the table, disconnect the hob from the power supply and wait 30 seconds before reconnecting it. If this display appears again, contact the technical after-sales service and specify the exact fault code.
- ■ If an error occurs, the appliance does not switch to standby mode.
- ■ In order to protect the appliance's electronic parts from overheating or surge currents, the hob may temporarily reduce the power level.

23.2 Malfunctions

Fault	Cause and troubleshooting
None	There has been a power cut. ▸ Check whether the lighting in your kitchen or other appliances are working.
	The appliance has not been connected in accordance with the circuit diagram. ▸ Ensure that the appliance has been connected in accordance with the circuit diagram.
	Electronics fault ▸ Call the after-sales service. → *"Customer Service", Page 31*
A signal tone sounds.	The control panel is wet or an object is covering it. ▸ Dry the control panel or remove the object.
The appliance has switched off the cooking zone. The illuminated ring on the control knob flashes.	The control knob has not been turned for an extended period. The safety shut-off has switched the heating process off. **1.** Turn the control knob to 0. **2.** Switch the appliance back on.
	The appliance is too hot. ▸ Note the fault message on the control panel.
The indicator flashes.	The appliance has not detected the cookware. ▸ Ensure that the cookware is suitable for use with an induction hob. **1.** Ensure that the diameter of the base of the cookware corresponds to the size of the cooking zone. **2.** Turn the control knob to 0. **3.** Switch on the cooking zone again.
The indicator flashes and the control knob lights up orange.	You have removed the cookware from the hotplate during cooking. ▸ Turn the control knob to 0.

Fault	Cause and troubleshooting
dEON lights up. The appliance does not heat up.	Demo mode is activated. ▸ Deactivate the demo mode. → *Page 30*
F2	The electronics have overheated and have switched off the corresponding cooking zone. **1.** Remove the cooking utensils from the cooking zone. ✔ When the fault display goes out, the cooking zone has cooled down sufficiently. **2.** Turn the control knob to 0. **3.** Set the power level as usual.
F4	The electronics have overheated and all of the cooking zones have been switched off. **1.** Remove the cooking utensils from the cooking zone. ✔ When the fault display goes out, the cooking zone has cooled down sufficiently. **2.** Turn the control knob to 0. **3.** Set the power level as usual.
F5 + heat setting and signal tone	There is hot cookware near the control panel. There is a risk that the electronics will overheat. **1.** Remove the cookware. **2.** Wait a few seconds. ✔ The fault display goes out. **3.** Continue cooking as usual.
F5+ audible signal	There is hot cookware near the control panel. To protect the electronics, the cooking zone has been switched off. **1.** Remove the cookware. **2.** Wait a few seconds. ✔ The fault display goes out. **3.** Continue cooking as usual.
F1/F6	The cooking zone has overheated and it has been switched off to protect the work surface **1.** Wait until the electronics have cooled sufficiently. **2.** Switch on the cooking zone again.
F8	The cooking zone has been operating continuously for an extended period. The automatic safety cut-out function is activated. ▸ Observe the information about the automatic safety switch-off → *Page 19*.
F9	The FlexPlus cooking zone cannot be activated. **1.** Check the fault display by pressing any control. **2.** Continue to cook with the remaining cooking zones. **3.** Contact the after-sales service.
E9000 / E9010	The operating voltage is incorrect, outside of the normal operating range. ▸ Contact the electricity supplier.
U400	The hob has not been connected correctly. **1.** Disconnect the hob from the mains. **2.** Ensure that the hob has been connected in accordance with the circuit diagram.

23.3 If the error message is repeated, inform customer service

Requirement: The error message is not listed in the Overview → *Page 29*.

1. Disconnect the appliance from the mains power supply.
2. Wait 30 seconds.
3. Reconnect the appliance.
4. If the error message appears again, inform customer service and specify the exact error message.

23.4 Standby mode in the event of an error message

If the appliance displays an error message, the appliance does not switch to standby mode.

23.5 Normal noises from your appliance

An induction hob may sometimes cause noises or vibrations, such as buzzing, crackling, hissing noises, fan noises or rhythmic noises.

23.6 Deactivating demo mode

The appliance does not heat up in demo mode. If dEON lights up, demo mode is activated.

1. Disconnect the appliance from the mains power supply.
2. Wait for 30 seconds.

3. Reconnect the appliance.
   – Deactivate the demo mode within the next 3 minutes.
4. Turn one of the control knobs anti-clockwise to ≫.
5. Turn the same control knob clockwise to 1.
6. Turn the same control knob anti-clockwise to 0.
   ✔ The illuminated ring on the control knob lights up yellow.
7. Turn the same control knob clockwise to 1.
   ✔ ON lights up.
   ✔ The illuminated ring on the control knob lights up green.
8. Wait approx. 5 seconds.
   ✔ OFF lights up.
   ✔ The illuminated ring on the control knob lights up yellow.
   ✔ Demo mode is deactivated.

24 Customer Service

Function-relevant genuine spare parts according to the corresponding Ecodesign Order can be obtained from Customer Service for a period of at least 10 years from the date on which your appliance was placed on the market within the European Economic Area.

Note: Under the terms of the manufacturer's warranty the use of Customer Service is free of charge.

Detailed information on the warranty period and terms of warranty in your country is available from our after-sales service, your retailer or on our website.
If you contact Customer Service, you will require the product number (E-Nr.) and the production number (FD) of your appliance.
The contact details for Customer Service can be found in the enclosed Customer Service directory or on our website.

24.1 Product number (E-Nr.) and production number (FD)

You can find the product number (E-Nr.) and the production number (FD) on the appliance's rating plate. The rating plate is located on the underside of the appliance.
The product number (E no.) can also be found on the glass ceramic. You can also display the customer service index (KI) and the production number (FD) in the basic settings. → *Page 19*
Make a note of your appliance's details and the Customer Service telephone number to find them again quickly.

25 Declaration of Conformity

BSH Hausgeräte GmbH hereby declares that the appliance with Home Connect functionality conforms to the basic requirements and other relevant provisions of Directive 2014/53/EU.
A detailed RED Declaration of Conformity can be found online at www.gaggenau.com among the additional documents on the product page for your appliance.

CE

Hereby, BSH Hausgeräte GmbH declares that the appliance with Home Connect functionality is in compliance with relevant statutory requirements.[1]

A detailed Declaration of Conformity can be found online at www.gaggenau.com/gb among the additional documents on the product page for your appliance.[1]

UK CA

Only applies to Great Britain

2.4 GHz band (2400–2483.5 MHz): Max. 100 mW
5 GHz band (5150–5350 MHz + 5470–5725 MHz): Max. 100 mW

!	BE	BG	CZ	DK	DE	EE	IE	EL	ES
	FR	HR	IT	CY	LI	LV	LT	LU	HU
	MT	NL	AT	PL	PT	RO	SI	SK	FI
	SE	NO	CH	TR	IS	UK (NI)			
5 GHz WLAN (Wi-Fi): For indoor use only.									

AL	BA	MD	ME	MK	RS	UK	UA
5 GHz WLAN (Wi-Fi): For indoor use only.							

26 Installation instructions

Observe this information when installing the appliance.

[1] Only applies to Great Britain

26.1 Scope of delivery

After unpacking all parts, check for any damage in transit and completeness of the delivery.

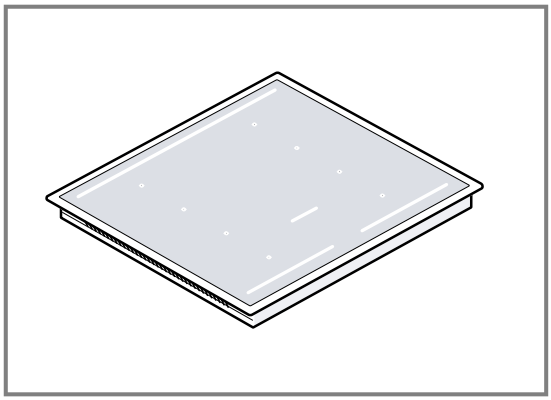

Order the appropriate control knob in black or stainless steel.

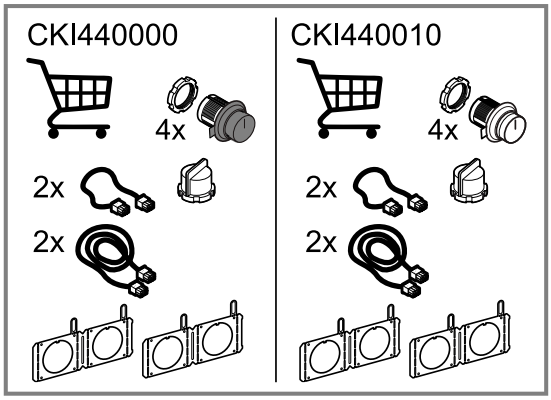

26.2 Appliance dimensions

You will find the dimensions of the appliance here

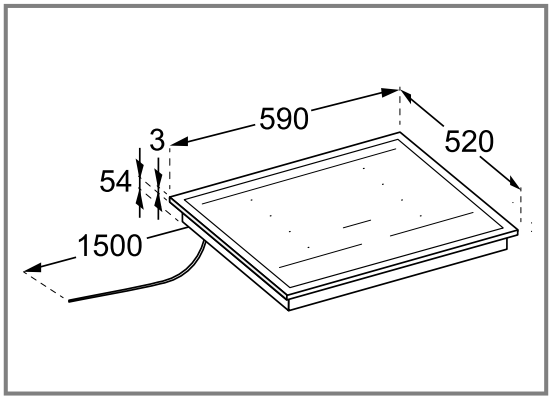

26.3 General information

- Read this instruction manual carefully.
- Only a licensed expert may connect the appliance.
- Switch off the power supply before carrying out any work.
- Never use this appliance in boats or in vehicles.
- Follow the worktop manufacturer's recommendations.

26.4 Safe installation

Follow these safety instructions when installing the appliance.

WARNING – Danger: Magnetism!

The appliance contains permanent magnets. These may affect electronic implants, e.g. heart pacemakers or insulin pumps.

- Persons with electronic implants must stay at least 10 cm away from the appliance.

WARNING – Risk of injury!

Components inside the appliance may have sharp edges.

- Wear protective gloves.

WARNING – Risk of electric shock!

Incorrect repairs are dangerous.

- Repairs to the appliance should only be carried out by trained specialist staff.
- Only use genuine spare parts when repairing the appliance.
- If the power cord of this appliance is damaged, it must be replaced with a special connection cable, which is available from the manufacturer or his Customer Service.

WARNING – !

Incorrect installation is dangerous.

- Connect and operate the appliance only in accordance with the specifications on the rating plate.
- The protective conductor system of the domestic electrical installation must be properly installed.
- Never equip the appliance with an external switching device, e.g. a timer or remote control.
- When the appliance is installed, the mains plug of the power cord must be freely accessible. If free access is not possible, an all-pole isolating switch must be installed in the permanent electrical installation according to the installation regulations.
- When installing the appliance, check that the power cable is not trapped or damaged.

Only an appliance which has been correctly installed in accordance with these installation instructions can be used safely. The installer shall be liable for damages incurred as a result of incorrect installation.

26.5 Notes on the installation

Observe the following installation instructions.

- Improper installation, connection or incorrect installation may lead to loss of the warranty.
- You can only install the induction hob above drawers or ovens with fan ventilation.

- Do not install refrigerators, dishwashers, non-ventilated ovens or washing machines underneath the appliance.
- The clearance between the extractor hood and the hob must correspond at least to the clearance specified in the installation instructions for the extractor hood.
- The worktop must be level, horizontal and stable. Follow the instructions provided by the worktop manufacturer.
- If the thickness of the worktop does not comply with the specifications, reinforce the worktop using a fire- and water-resistant material until it reaches the minimum thickness. Otherwise, sufficient stability cannot be guaranteed.
- The worktop into which you install the hob should be able to withstand loads of approx. 60 kg. If necessary, strengthen the worktop with heat- and water-resistant material.
- Only check that the hob is level once it has been installed.

26.6 Instructions for the electrical connection

In order to safely connect the appliance electrically, observe this information.

- Check the household wiring before connecting the appliance. Ensure that there is sufficient fuse protection for the household wiring. The voltage and frequency of the appliance must match the electrical installation (see rating plate).
- Ensure that the power supply is properly earthed, that the fuse protection is sufficient and the cable and wiring system in the building is sufficiently dimensioned for the electrical power of the appliance.
- Route the connection cable in such a way that it does not touch the hot casing.
- Use only the connection cable that is supplied with the appliance or is provided by technical customer service.
- This appliance complies with the EC interference suppression regulations.
- The appliance corresponds to protection class 1. You should therefore only use the appliance with a protective earth connection.
- Ensure that the protection against contact is guaranteed during installation.
- Only a qualified electrician may connect appliances without a plug. They are subject to the requirements of the local electricity provider. We recommend installing a residual-current-operated circuit-breaker (RCCB) in the appliance's power supply circuit.
- Carry out the electrical connection in accordance with the installation instructions. The appliance may be damaged if it is not connected correctly.
- The manufacturer shall assume no liability for malfunctions or damage resulting from incorrect electrical wiring.

26.7 Information about flush installation

With the flush installation, the appliance and worktop are on one level. There is no unattractive stepping between the appliance and the worktop.
You can install the appliance in the following temperature-resistant and waterproof worktops:

- Stone worktops
- Plastic worktops, e.g. Corian®
- Solid wood worktops

Coordinate with the worktop manufacturer when using other materials.
Installation in compressed-wood worktops is not possible.
Have all cut-out work on the worktops carried out in a specialist workshop in compliance with the installation diagram. The cut-out must be neat and precise since the cut edge is visible on the surface.
Clean and degrease the cut-out edges with a suitable cleaning agent. When doing so, observe the usage instructions from the silicone manufacturer.
To level the appliance, do not use supports at individual points.

26.8 Combining multiple appliances

Requirement: You need a suitable connection strip to combine several Vario appliances. You can obtain the connection strip as an optional accessory.

1. When making the unit cut-out, allow extra space for the connecting strip between the appliances.
   - Observe the installation instructions for the connection strip.

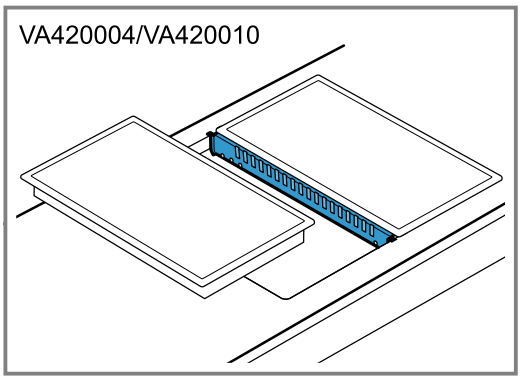

2. If required, install the appliances in individual cut-outs.
   - Maintain a bar width of at least 50 mm between the individual cut-outs.

26.9 Installation accessories

Here, you can find an overview of the installation accessories.
Use the accessories only as specified. The manufacturer shall accept no liability if you use the accessories incorrectly.

Accessories	Order number
Connection strip for flush installation	VA420004
Connection strip for surface-mounted installation	VA420010

26.10 Preparing the unit

ATTENTION!

A fan is located on the underside of this hob.

- ▸ If a drawer is located on the underside of the hob, do not store any small or pointed objects, paper or tea towels in it. These objects may be sucked in and damage the fan or impair the cooling.
- ▸ There must be a clearance of at least 2 cm between the contents of the drawer and the fan entry point.

Requirements

- The fitted units are heat-resistant up to 90 °C.
- The worktop is level, horizontal and stable.

1. Follow the instructions on combining several appliances.
   → *"Combining multiple appliances", Page 33*
2. Ensure that the thickness of the worktop corresponds to the required minimum thickness.

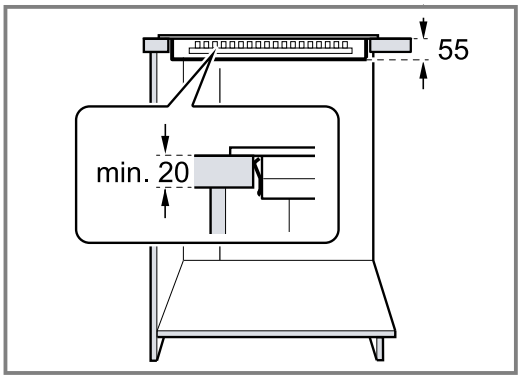

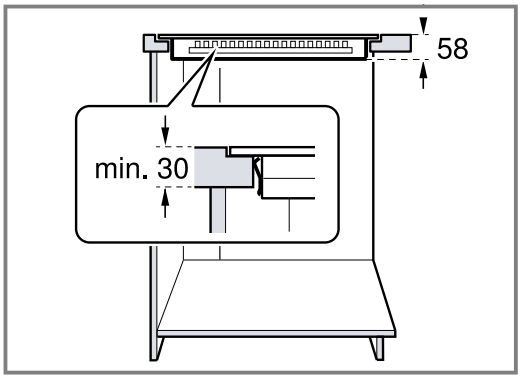

3. Maintain the minimum clearance from the upper edge of the worktop to the upper edge of a drawer installed below it.

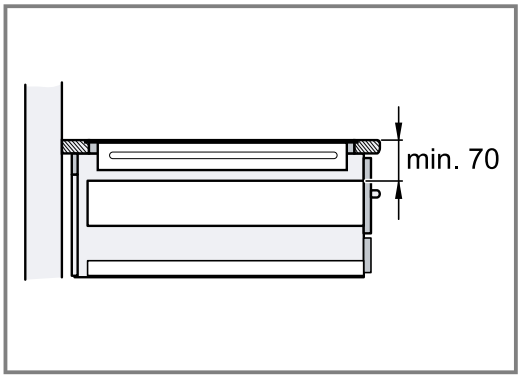

4. Mark the unit cut-out in accordance with the installation diagram.

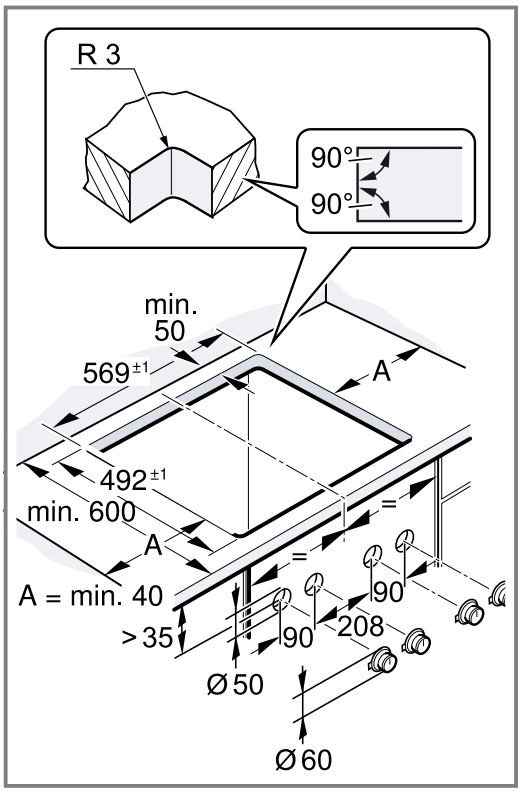

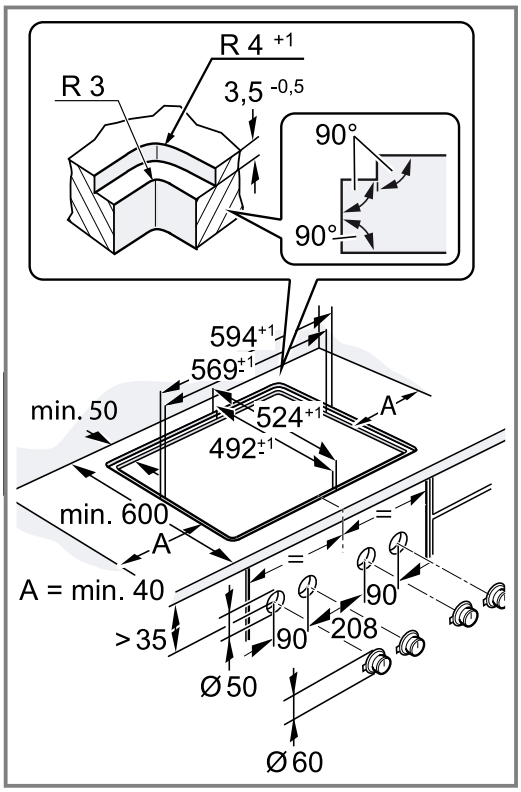

5. Ensure that the angle of the cut surface to the worktop is 90°.

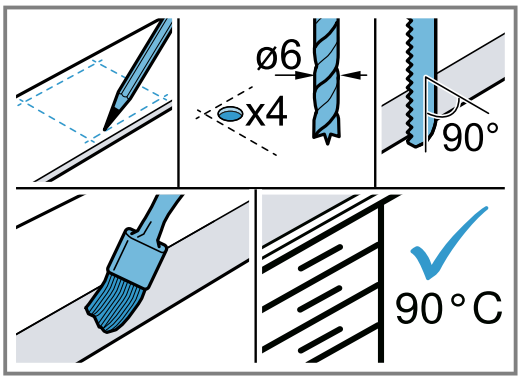

6. Remove dust and residues from the cut-out work. Seal the cut surfaces so that they are heat-resistant and waterproof.
7. Provide an intermediate floor between the appliance and the top drawer.

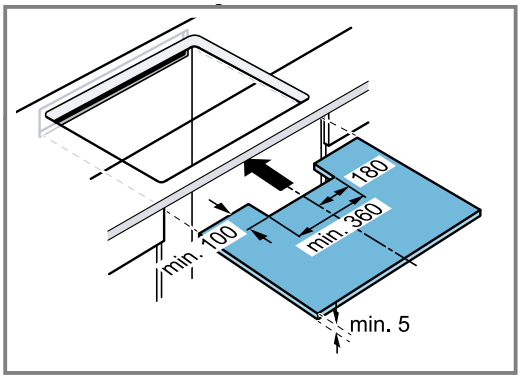

8. Observe the clearance between the intermediate floor and the worktop.

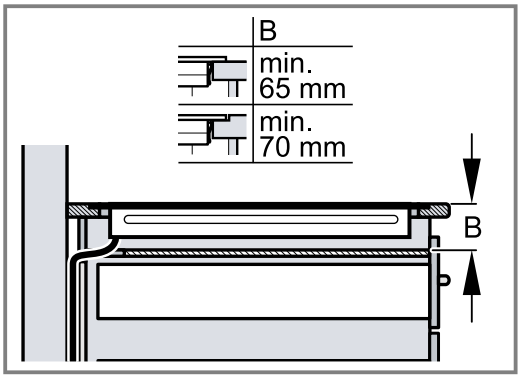

Creating ventilation openings

Requirement: The appliance requires sufficient ventilation from below to function correctly.

1. Make a unit cut-out in the upper area on the rear of the unit.

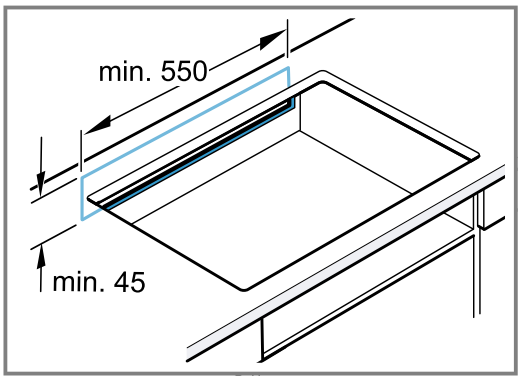

2. Observe the minimum clearances.

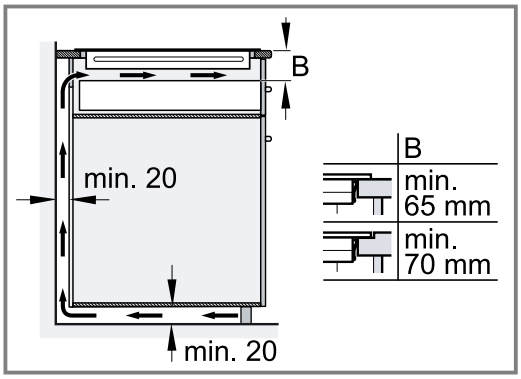

3. If there is no minimum clearance at the rear of the unit, make a unit cut-out in the bottom of the unit.

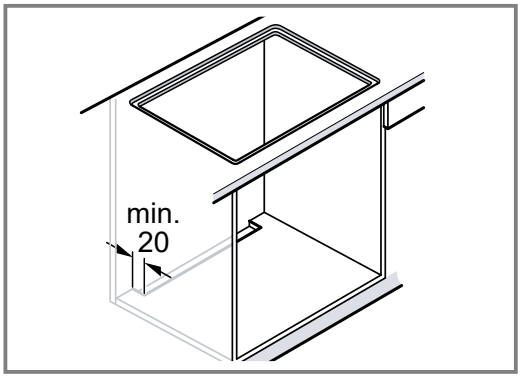

4. Ensure that the base of the unit is sufficiently ventilated.
5. When installing in a cooking island, ensure that the appliance is well ventilated.

Making the cut-out for the control knob

1. Create the holes for the control knob in accordance with the enclosed instructions.
2. If the panel is more than 23 mm thick, cut out the rear of the front panel for the retaining plate.

3. Note the clearances between the control knobs.

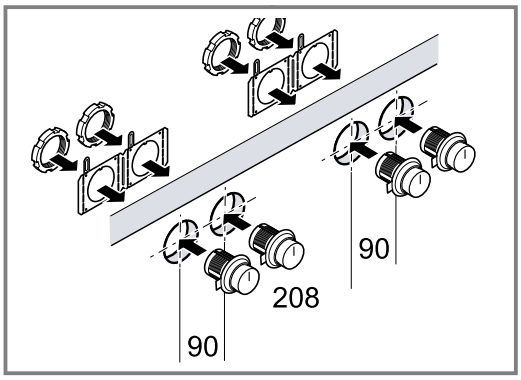

4. After making the cut-outs, remove any shavings.
5. Seal the cut surfaces so that they are heat-resistant and waterproof.

26.11 Installing the mains cable

On appliances that do not have a pre-installed cable, you must insert the power cord into the mains socket.

1. To prevent scratches, have a cloth or the packaging ready.
2. Turn the appliance over and put it down on the base of the packaging, a cloth or another surface in order to prevent scratches.
3. Use a screwdriver to lift up the cover of the mains socket.

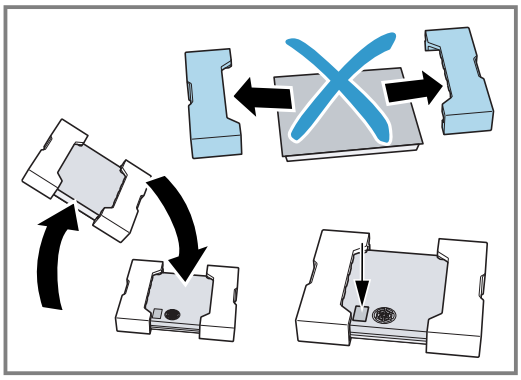

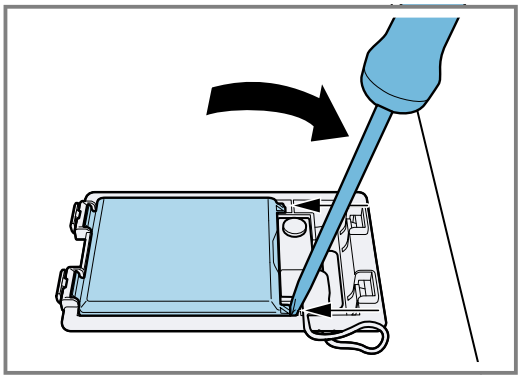

4. Undo the fastening screw and use a screwdriver to lift the hose clamp.

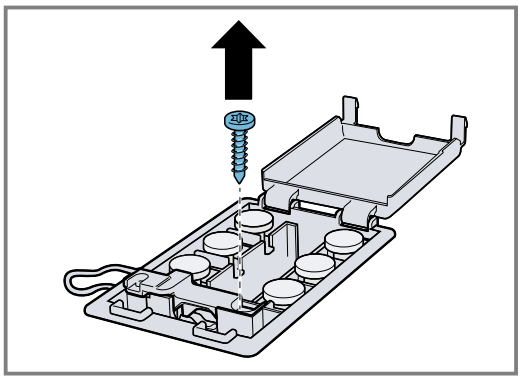

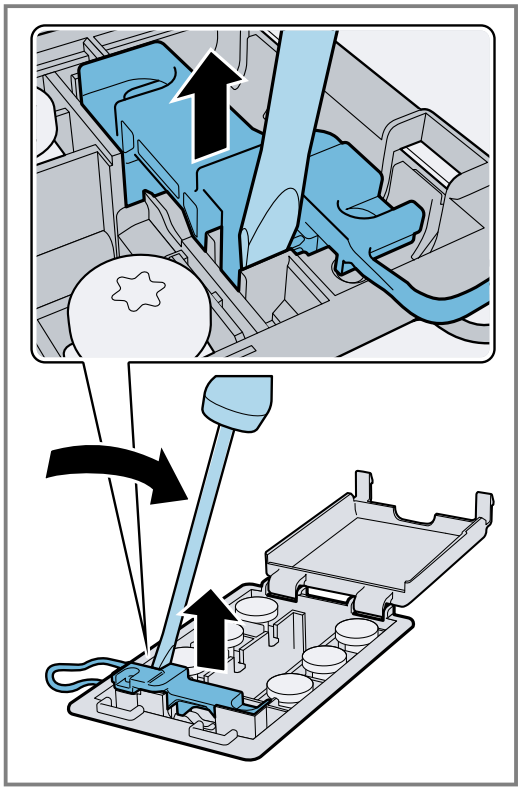

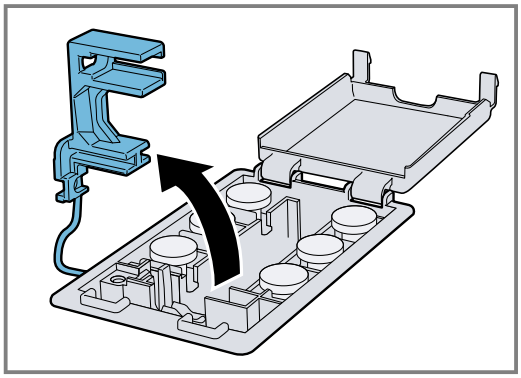

5. Only connect in accordance with the connection diagram for the connection box.

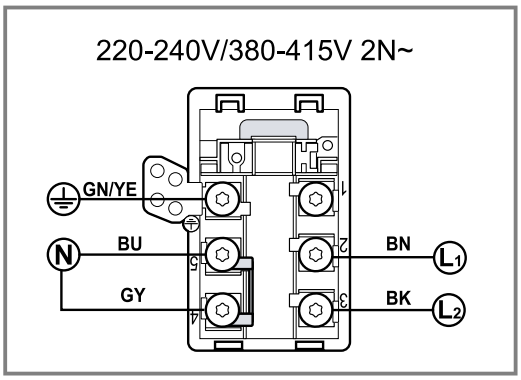

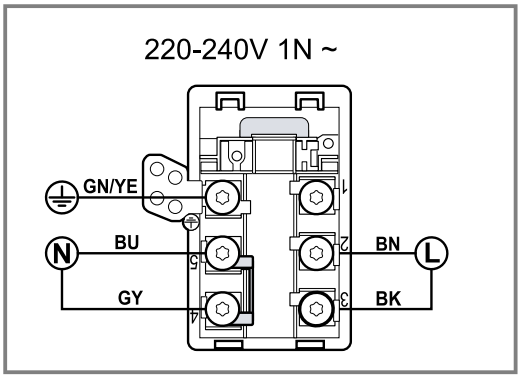

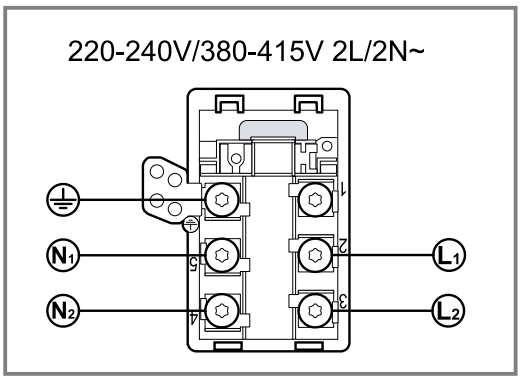

- BN: Brown
- BU: Blue
- GN/YE: Green and yellow
- BK: Black
- GY: Grey

Note:

- If the connection is carried out in accordance with connection diagram 1 N~, use the supplied 3-wire cable. Arrange the bridges in accordance with the connection diagram.
- If the appliance is connected in accordance with the connection diagram 2 L / 2 N~, change the configuration of the bridges in accordance with the diagram.

6. After connecting the cable, check whether that the screws on the connection box have been tightened properly.

7. Use the hose clamp to secure the power cord and tighten the fastening screw.

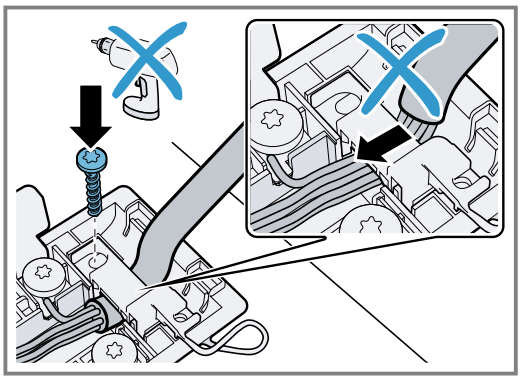

8. Close the cover on the mains socket.
   - Arrange the cables in the central area of the mains socket in order to facilitate the fastening.
9. To keep the power cord away from the drawer, use the enclosed cable strap to secure the power cord to the underside of the appliance.

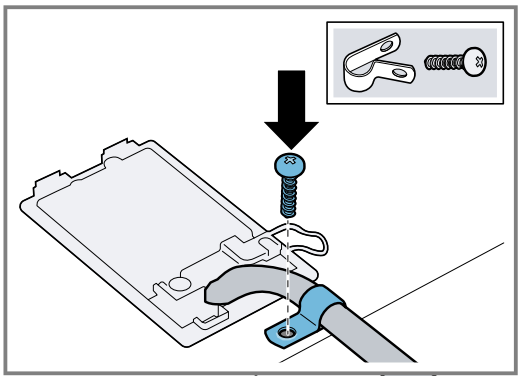

If a longer power cord is required, please contact customer service. Connecting cables up to 2.20 m are available.

26.12 Installing the control knob

1. If required, and depending on the distance between the control knobs, break off the retaining plate at the perforation.

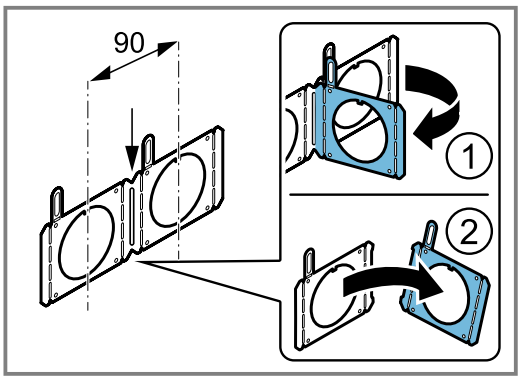

2. Hold the retaining plate in place against the rear of the control panel.

3. When fitting an individual control knob, use 2 screws to hold the retaining plate in place and prevent it from rotating.
   – In the case of stone worktops, stick the retaining plate using heat-resistant, two-component adhesive.

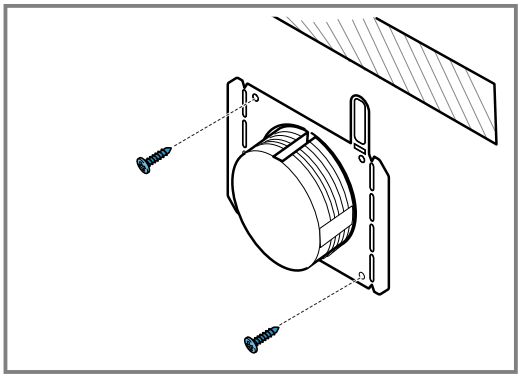

4. Remove the protective film from the rear of the illuminated ring.

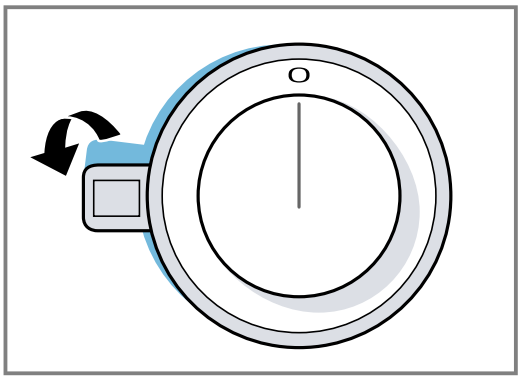

5. Install the control knob in the correct sequence.

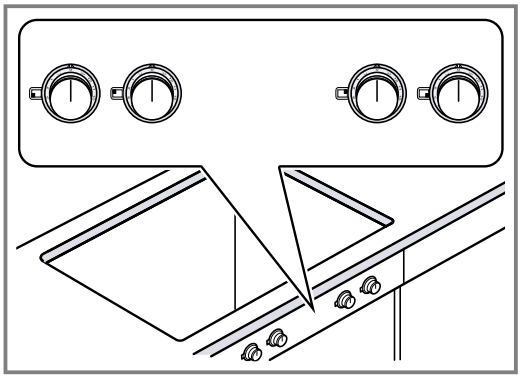

6. Push the control knob into the hole.
   – Always position the side marking on the control knob on the left.

7. Ensure that the retaining lug on the retaining plate is located on the upper side and the control knob is in the zero setting.

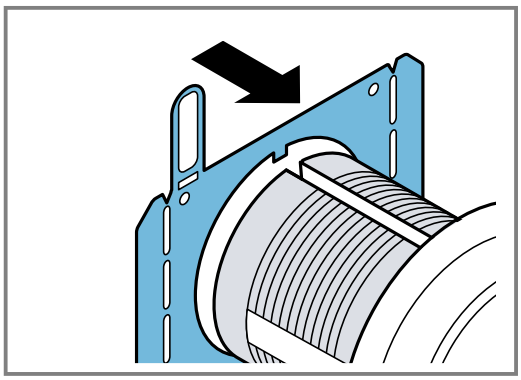

8. On the rear of the control knob, tighten the retaining nut using the installation tool provided.

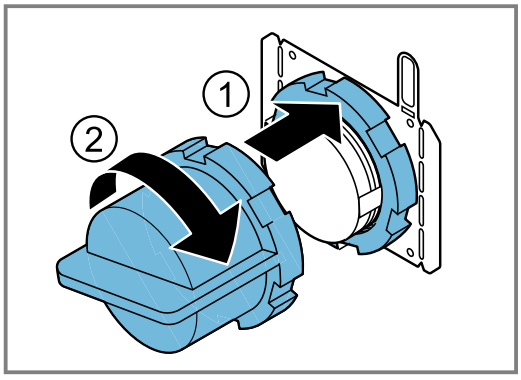

9. Align the control knob precisely in the zero setting.

26.13 Connecting the control knob to the connection cables

1. Connect all of the control knobs to the enclosed connection cables.

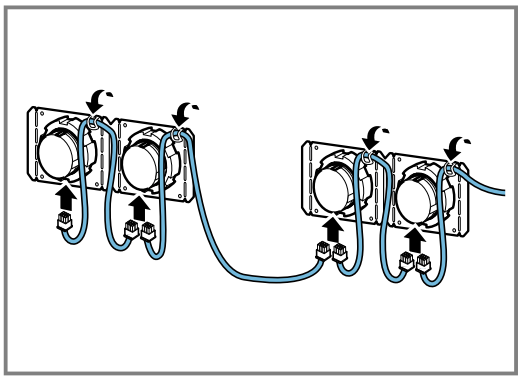

   The two connectors on the control knob are identical.
2. Ensure that the plugs snap into place in the connectors.
3. Connect the central control knobs to one of the longer connection cables.
4. After installation, check that all of the plug connections are seated correctly.
5. To secure all connection cables after installation, bend the mounting brackets on the retaining plates.

26.14 Connecting connection cables to the appliance

ATTENTION!
Heat may damage the appliance's connection cables.
- Ensure that the connection cables do not touch any hot parts of the hob or oven.
- Install an intermediate floor so that the connection cables are no longer accessible after the hob has been installed.

1. Connect the connection cable for any of the control knobs to the appliance's socket.

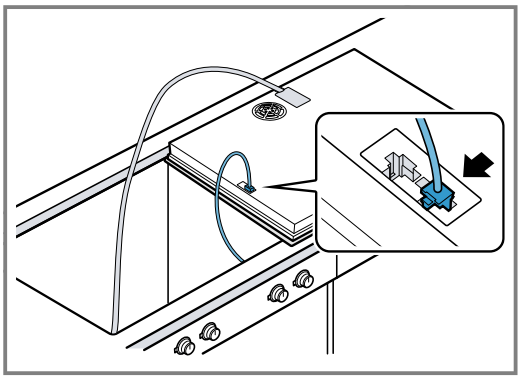

2. Ensure that the plug engages in the socket.

26.15 Installing the appliance

⚠ **WARNING – Risk of electric shock!**
If the insulation of the power cord is damaged, this is dangerous.
- Never let the power cord come into contact with hot appliance parts or heat sources.
- Never let the power cord come into contact with sharp points or edges.
- Never kink, crush or modify the power cord.

1. Keeping the appliance level, insert it into the unit cut-out.

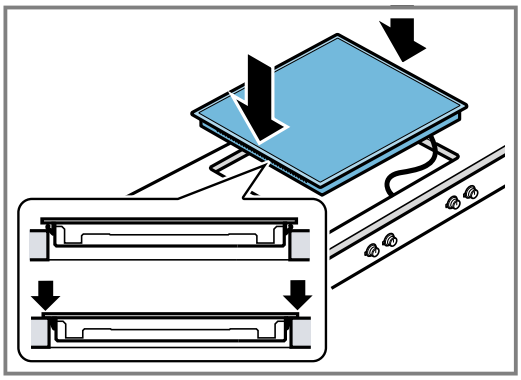

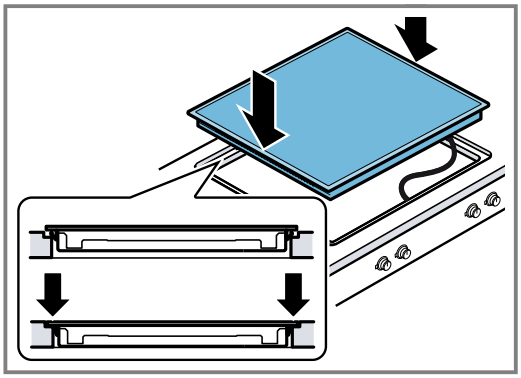

2. If the oven is a built-under type, route the mains connection cable along the rear corners of the oven to the mains socket.

26.16 Establishing the power supply

1. Observe the connection data on the rating plate.

2. Connect the cable to the mains socket in accordance with the figure.

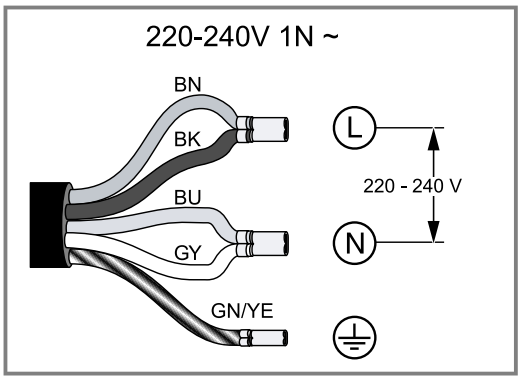

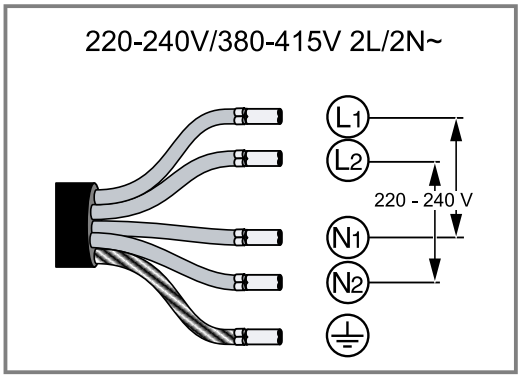

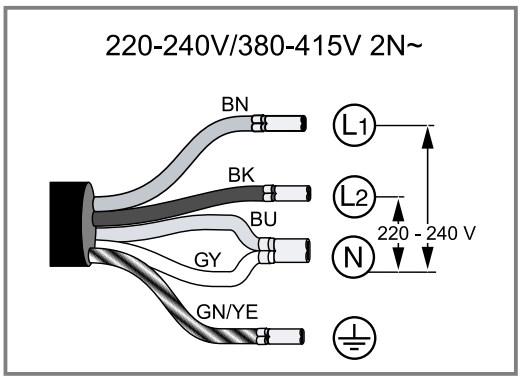

3. Note the colours of the cables.

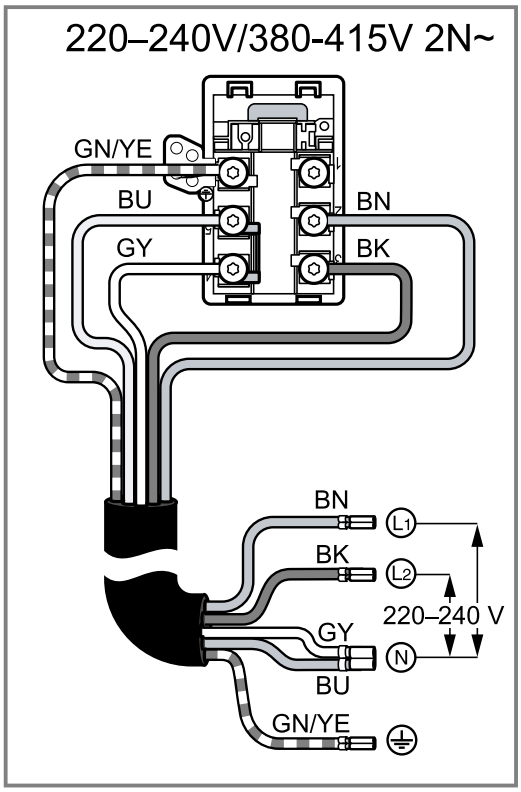

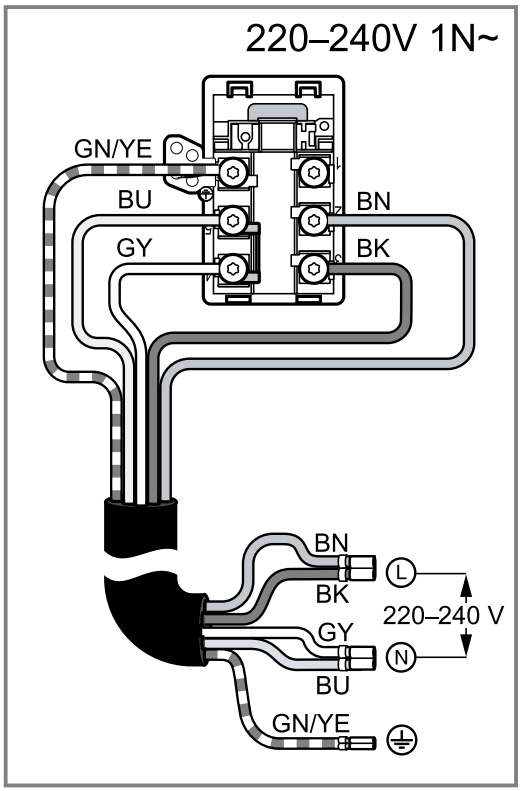

- BN: Brown
- BU: Blue
- GN/YE: Green and yellow
- BK: Black
- GY: Grey

4. Depending on the type of connection, change the arrangement of the terminals supplied by the factory, if required.
- For this, if required, shorten the clamps and remove the insulation in order to insert a clamp that connects the 2 cables.

26.17 Checking the functionality

1. Switch on the appliance.
2. If U400, E0513 or E lights up, the appliance is not connected correctly.
   – Disconnect it from the power supply and check the power cord connection.
   → *"Establishing the power supply", Page 39*
3. If no faults appear on the appliance's display, use the operating instructions to check that the appliance is working.

26.18 Sealing the joints

For flush installation, seal the joints with silicone.

Requirement: You must carry out a function test before sealing any joints.

1. Seal all around the gap using suitable, heat-resistant silicone, e.g. Novasil® S70 or Ottoseal® S70.

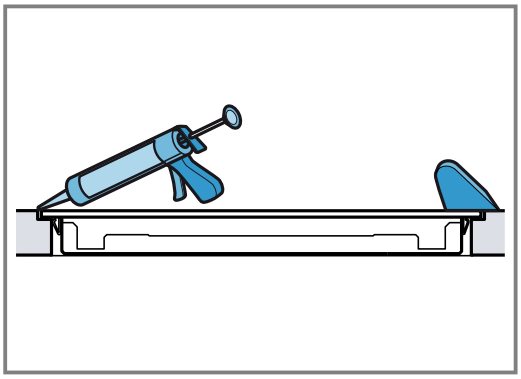

   Unsuitable silicone adhesive causes permanent discoloration to natural stone worktops.
2. Use the smoothing agent recommended by the manufacturer to smooth the joint.
3. Observe the usage instructions for the silicone adhesive.
4. Leave the silicone adhesive to dry for at least 24 hours.
   The drying time depends on the ambient temperature.
5. Do not operate the appliance until the silicone has dried completely.

26.19 Removing the appliance

⚠ **WARNING – Risk of electric shock!**

When disconnecting the appliance from the power supply, the terminals may cause reverse voltage.

- The electrical connection must only be carried out by licensed specialist staff.

ATTENTION!

Tools may damage the appliance frame.

- Do not prise out the appliance from above.

1. Disconnect the appliance from the power supply.
2. Remove the silicone joint.
3. Push out the appliance from below.

BSH Hausgeräte GmbH
Carl-Wery-Straße 34
81739 München, GERMANY
www.gaggenau.com

Valid within Great Britain:
Imported to Great Britain by
BSH Home Appliances Ltd.
Grand Union House
Old Wolverton Road
Wolverton, Milton Keynes
MK12 5PT
United Kingdom

GAGGENAU

9001798283 en (021108)