**Gaggenau**

en Information for Use

# CV2821.1

FlexInduction hob with integrated ventilation system

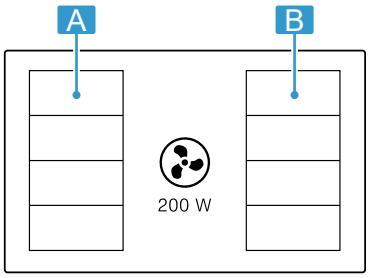


| A / B | 9 [1] | b [1] |
|---|---|---|
| | 2,200 W | 3,700 W |
| | 3,300 W | 3,700 W |

[1] IEC 60335-2-6

# Table of contents


1 **Safety** ... 3
2 **Preventing material damage** ... 6
3 **Environmental protection and saving energy** ... 6
4 **Disposal** ... 7
5 **Induction cooking** ... 7
6 **Familiarising yourself with your appliance** ... 9
7 **Operating modes** ... 10
8 **Before using for the first time** ... 11
9 **TwistPad® with twist knob** ... 11
10 **Basic operation** ... 12
11 **Flex Zone** ... 16
12 **Transfer settings** ... 17
13 **Professional cooking function** ... 18
14 **Timer function** ... 18
15 **Booster function for pots** ... 20
16 **Booster function for pans** ... 20
17 **Keep-warm function** ... 21
18 **Frying sensor function** ... 21
19 **Cooking sensor function** ... 23
20 **Childproof lock** ... 29
21 **Locking the control panel for cleaning** ... 29
22 **Automatic switch-off** ... 29
23 **Wireless cooking sensor** ... 30
24 **Basic settings** ... 32
25 **Home Connect** ... 33
26 **Cookware test** ... 35
27 **Power limitation** ... 36
28 **Cleaning and servicing** ... 36
29 **FAQs** ... 40
30 **Troubleshooting** ... 41
31 **Customer Service** ... 44
32 **Declaration of Conformity** ... 44


# ⚠ 1 Safety

Observe the following safety instructions.

## 1.1 General information

- Read this instruction manual carefully.
- Keep the instructions, the appliance and the product information safe for future reference or for the next owner.
- Do not connect the appliance if it has been damaged in transit.

## 1.2 Intended use

Only a licensed professional may connect appliances without plugs. Damage caused by incorrect connection is not covered under the warranty.
The appliance can only be used safely if it is correctly installed according to the safety instructions. The installer is responsible for ensuring that the appliance works perfectly at its installation location.
Only use this appliance:

- To prepare meals and drinks.
- Under supervision. Never leave the appliance unattended when cooking for short periods.
- in private households and in enclosed spaces in a domestic environment.
- up to an altitude of max. 4000 m above sea level.

Do not use the appliance:

- On boats or in vehicles.
- With an external timer or a separate remote control. This does not apply if operation with appliances included in EN 50615 is switched off.
- To extract hazardous or explosive substances and vapours.
- To extract small parts and liquids.

When using the cooking functions, set the hotplate on which you have placed the saucepan with the temperature sensor.
If you wear an active implantable medical device (e.g. a pacemaker or defibrillator), check with your doctor that it complies with Council Directive 90/385/EEC of 20th June 1990, EN 45502-2-1 and EN 45502-2-2, and that it has been chosen, implanted and programmed in accordance with VDE-AR-E 2750-10. If these conditions are satisfied, and if, in addition, non-metal cooking utensils and cookware with non-metal handles are used, it is safe to use this induction hob as intended.

### 1.3 Restriction on user group

This appliance may be used by children aged 8 or over and by people who have reduced physical, sensory or mental abilities or inadequate experience and/or knowledge, provided that they are supervised or have been instructed on how to use the appliance safely and have understood the resulting dangers.
Do not let children play with the appliance.
Children must not perform cleaning or user maintenance unless they are at least 15 years old and are being supervised.
Keep children under the age of 8 years away from the appliance and power cable.

### 1.4 Safe use

**⚠ WARNING – Risk of suffocation!**

Children may breathe in or swallow small parts, causing them to suffocate.

- Keep small parts away from children.
- Do not let children play with small parts.

Children may put packaging material over their heads or wrap themselves up in it and suffocate.

- Keep packaging material away from children.
- Do not let children play with packaging material.

**⚠ WARNING – Risk of poisoning!**

Risk of poisoning from flue gases being drawn back in. Room-air-dependent heat-producing appliances (e.g. gas, oil, wood or coal-operated heaters, continuous flow heaters or water heaters) obtain combustion air from the room in which they are installed and discharge the exhaust gases into the open through an exhaust gas system (e.g. a chimney). With the extractor hood switched on, air is extracted from the kitchen and the adjacent rooms. Without an adequate supply of air, the air pressure falls below atmospheric pressure. Toxic gases from the chimney or the extraction shaft are sucked back into the living space.

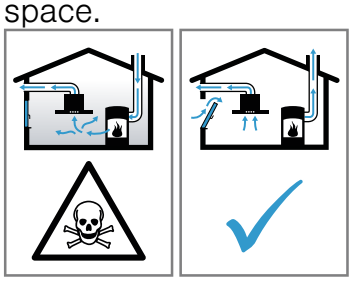

- Always ensure adequate fresh air in the room if the appliance is being operated in exhaust air mode at the same time as a room-air-dependent heat-producing appliance is being operated.
- It is only possible to safely operate the appliance if the pressure in the room in which the heating appliance is installed does not fall below 4 Pa (0.04 mbar). This can be achieved whenever the air needed for combustion is able to enter through openings that cannot be sealed, for example in doors, windows, incoming/exhaust air wall boxes or by other technical means. An incoming/exhaust air wall box alone is not sufficient to ensure compliance with the limit.
- In any case, consult your responsible chimney sweep. They are able to assess the house's entire ventilation setup and will suggest the suitable ventilation measures to you.
- Unrestricted operation is possible if the appliance is operated exclusively in circulating-air mode.

**⚠ WARNING – Risk of fire!**

Leaving fat or oil cooking on an unattended hob can be dangerous and may lead to fires.

- Never leave hot oil or fat unattended.
- Never attempt to extinguish a fire using water; instead, switch off the appliance and then cover with a lid or a fire blanket.

The cooking surface becomes very hot.

- Never place flammable objects on the cooking surface or in its immediate vicinity.
- Never place objects on the cooking surface.

The appliance will become hot.

- Do not keep combustible objects or aerosol cans in drawers directly underneath the hob.

Hob covers can cause accidents, for example due to overheating, catching fire or materials shattering.

- Do not use hob covers.

After every use, switch off the hob using the main switch.

- Do not wait until the hob turns off automatically as there are no longer any pots and pans on it.

Fatty deposits in the grease filters may catch fire.

- Never operate the appliance without a grease filter.
- Clean the grease filters regularly.
- Never work with naked flames close to the appliance (e.g. flambéing).
- Do not install the appliance near a solid fuel heating appliance (e.g. wood- or coal-burning) unless the heating appliance has a sealed, non-removable cover. There must be no flying sparks.

**⚠ WARNING – Risk of burns!**

The appliance and its parts that can be touched become hot during use, particularly the hob surround, if fitted.

- Caution should be exercised here in order to avoid touching heating elements.
- Young children under 8 years of age must be kept away from the appliance.

Hob protective grilles may cause accidents.

- Never use hob protective grilles.

Metal objects on the hob quickly become very hot.

- Never place metal objects (such as knives, forks, spoons and lids) on the hob.

The ventilation grille will quickly become extremely hot if it is placed on the hob.

- Never place the ventilation grille on the hob.
- Do not place any pans on the ventilation grille.
- Do not place any hot objects on the ventilation grille.

The appliance becomes hot during operation.

- Allow the appliance to cool down before cleaning.
- If hot liquids penetrate the appliance, only remove the ventilation grille, grease filter or the overflow container once the appliance has cooled down.

**⚠ WARNING – Risk of electric shock!**

Improper repairs are dangerous.

- Repairs to the appliance should only be carried out by trained specialist staff.
- Only use genuine spare parts when repairing the appliance.
- If the power cord or the appliance power cable of this appliance is damaged, it must be replaced with a special power cord or special appliance power cable, which is available from the manufacturer or its Customer Service.

If the appliance or the power cord is damaged, this is dangerous.

- Never operate a damaged appliance.
- Never operate an appliance with a cracked or fractured surface.
- Call customer services. → *Page 44*

An ingress of moisture can cause an electric shock.

- Do not use steam- or high-pressure cleaners to clean the appliance.

The insulation on cables of electrical appliances may melt if it touches hot parts of the appliance.

- Never bring electrical appliance cables into contact with hot parts of the appliance.

**⚠ WARNING – Risk of injury!**

Saucepans may suddenly jump due to liquid between the saucepan base and the hotplate.

- Always keep hotplates and saucepan bases dry.
- Never use icy-cold cookware that has been in the freezer.

The wireless temperature sensor is equipped with a battery, which may become damaged if it is exposed to high temperatures.
- Remove the sensor from the cookware and store it away from any heat sources.

The temperature sensor may be very hot when removing it from the saucepan.
- Wear oven gloves or use a tea towel to remove it.

When cooking in a bain marie, the hob and cooking container could shatter due to overheating.
- The cooking container in the bain marie must not directly touch the bottom of the water-filled pot.
- Only use heat-resistant cookware.

An appliance with a cracked or broken surface can cause cuts.
- Do not use the appliance if it has a cracked or broken surface.

⚠ **WARNING – Danger: Magnetism!**

The removable control element is magnetic and may affect electronic implants, e.g. heart pacemakers or insulin pumps.
- Persons with electronic implants must stand at least 10 cm away from the magnetic control element. Never put the control element in your pockets.

The wireless temperature sensor is magnetic and can damage electronic implants, e.g. heart pacemakers or insulin pumps.
- Persons with electronic implants must stand at least 10 cm away from the magnetic control element.
- Never put the control element in your pockets.

# 2 Preventing material damage

**ATTENTION!**

Rough pot and pan bases will scratch the ceramic.
- Check your cookware.

Boiling pans dry may damage cookware or the appliance.
- Never place empty pans on a heated hotplate or allow to boil dry.

Incorrectly positioned cookware can cause the electronics to overheat.
- Never place hot pots or pans on the controls, the displays, the hob surround or the ventilation grille.

Damage can occur if hard or pointed objects fall onto the hob.
- Do not let hard or pointed objects fall onto the hob.

Non heat-resistant materials will melt on heated hotplates.
- Do not use oven protective foil.
- Do not use aluminium foil or plastic containers.

## 2.1 Overview of the most common damage

Here you can find the most common types of damage and tips on how to avoid them.

| Damage | Cause | Measure |
|---|---|---|
| Stains | Food boiling over | Remove boiled-over food immediately with a glass scraper. |
| Stains | Unsuitable cleaning products | Only use cleaning products that are suitable for glass ceramic. |
| Scratches | Salt, sugar or sand | Do not use the hob as a work surface or storage space. |
| Scratches | Rough pot or pan bases | Check your cookware. |
| Discolouration | Unsuitable cleaning products | Only use cleaning products that are suitable for glass ceramic. |
| Discolouration | Pan abrasion, e.g. aluminium | Lift pots and pans to move on the hob. |
| Blisters | Sugar or food with a high sugar content | Remove boiled-over food immediately with a glass scraper. |

# 3 Environmental protection and saving energy

## 3.1 Disposing of packaging

The packaging materials are environmentally compatible and can be recycled.
- Sort the individual components by type and dispose of them separately.

### 3.2 Saving energy

If you follow these instructions, your appliance will use less energy.

Select the cooking zone to match the size of your pan. Centre the cookware on the hob.
Use cookware whose base diameter is the same diameter as the hotplate.

**Tip:** Cookware manufacturers often give the upper diameter of the saucepan. It is often larger than the base diameter.

- Unsuitable cookware or incompletely covered cooking zones consume a lot of energy.

Cover saucepans with suitable lids.

- Cooking without a lid consumes considerably more energy.

Lift lids as infrequently as possible.

- When you lift the lid, a lot of energy escapes.

Use a glass lid.

- You can see into the pan through a glass lid without having to lift it.

Use pots and pans with flat bases.

- Uneven bases increase energy consumption.

Use cookware that is suitable for the quantity of food.

- Large items of cookware containing little food need more energy to heat up.

Cook with only a little water.

- The more water that is contained in the cookware, the more energy is required to heat it up.

Turn down to a lower power level early on. Use a suitable ongoing power level.

- If you use an ongoing power level that is too high, you will waste energy.

Adjust the fan speed to the amount of steam produced during cooking.

- The lower the fan speed, the less energy is consumed.
  Only use the intensive mode as required.

If cooking produces large amounts of steam, select a higher fan speed in good time.

- The odours are distributed around the room less.

Switch the appliance off when you are not using it.

-

Ensure that there is sufficient ventilation when cooking.

- The appliance works more efficiently and with fewer operating noises.

Clean or replace the filters at regular intervals.

- The effectiveness of the filter is retained.

Product Information according (EU) 66/2014 can be found on the attached appliance pass and online on the product page for your appliance.

# 4 Disposal

### 4.1 Disposing of old appliance

Valuable raw materials can be reused by recycling.

- Dispose of the appliance in an environmentally friendly manner.
  Information about current disposal methods are available from your specialist dealer or local authority.

This appliance is labelled in accordance with European Directive 2012/19/EU concerning used electrical and electronic appliances (waste electrical and electronic equipment - WEEE).
The guideline determines the framework for the return and recycling of used appliances as applicable throughout the EU.

### 4.2 Disposing of batteries

Batteries should be recycled in an environmentally friendly manner. Do not dispose of the batteries in the household rubbish.

- Dispose of batteries in an environmentally friendly manner.

According to the European Guideline 2006/66/EC, defective or used battery packs/batteries, must be collected separately and disposed of in an environmentally correct manner.

# 5 Induction cooking

### 5.1 Advantages of induction cooking

Induction cooking is fundamentally different from traditional cooking methods, since the heat builds up directly in the cookware. This offers numerous advantages:

- Saves time when boiling and frying.
- Saves energy.
- Easier to care for and clean. Spilled food does not burn on as quickly.
- Controlling the heat supply and safety; the hob increases or decreases the heat supply as soon as the user changes the setting. The induction cooking zone stops the heat supply if you remove the cookware from the cooking zone without you having to switch it off first.

## 5.2 Cookware

Only ferromagnetic cookware is suitable for induction cooking.
For example:
- Enamelled steel cookware
- Cast iron cookware
- Special induction-compatible cookware made from stainless steel

Use Cookware test to check whether the cookware is suitable. Refer to
→ *"Cookware test", Page 35* for more details.
In order to achieve a good cooking result, ensure that the ferromagnetic area of the cookware base corresponds to the size of the cooking zone. If the cookware is not detected on a cooking zone, place it on a cooking zone with a smaller diameter.

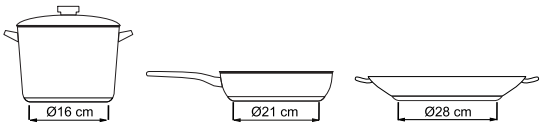


If you are using the Flex Zone as a single cooking zone, you can use larger cookware that is particularly suited to this zone. You can find information on positioning the cookware in
→ *"Flex Zone", Page 16*.

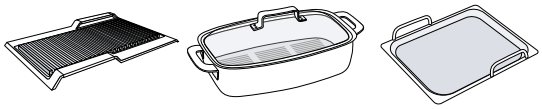

On some items of induction cookware, the base is not fully ferromagnetic: For large cookware with a smaller ferromagnetic base, only the area that is ferromagnetic heats up. As a result, the heat is not distributed evenly. The temperature of the non-ferromagnetic area may therefore be too low for cooking.

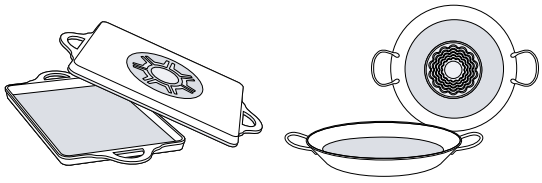

Cookware bases that contain aluminium reduce the ferromagnetic area. This may reduce the output and the cookware will not be detected sufficiently or at all, and will therefore not be heated sufficiently.

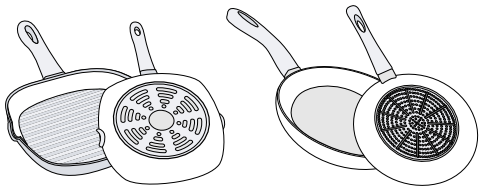

### Unsuitable cookware

Never use flow plates or cookware made of the following:
- Thin-walled normal steel
- Glass
- Clay
- Copper
- Aluminium

### Composition of the cookware base

The material(s) from which the base of the cookware is made may affect the cooking result. Cookware made of materials that distribute heat evenly in the pot, such as saucepans with a stainless steel sandwich base, save time and energy.
You should ideally use cookware with a flat base, as uneven cookware bases impair the heat supply.

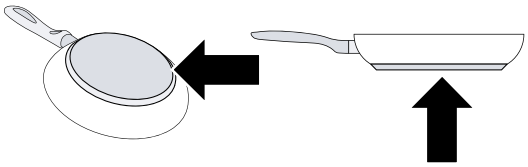

### No cookware/cookware of an unsuitable size

If you do not place cookware on the selected cooking zone or the cookware is made of an unsuitable material or is not the right size for the cooking zone, the display for the cooking zone flashes. To switch off the display, place a suitable item of cookware on the cooking zone. If you do not place a suitable item of cookware on the cooking zone within 90 seconds, it automatically switches off.

### Empty cookware or cookware with a thin base

Do not heat empty items of cookware and do not use cookware with a thin base. The hob is equipped with an internal safety system. Empty cookware may heat up so quickly that the "Automatic switch-off" function does not respond in good time. This results in an excessive temperature that melts the base of the cookware and damages the glass plate. In this case, do not touch the cookware, and switch off the cooking zone. If the cooking zone no longer works after cooling down, contact the technical customer service.

### Cookware detection

Each cooking zone has a minimum limit for the cookware detection and this depends on the ferromagnetic diameter and the material of the base of the cookware. Therefore, always use the cooking zone that best corresponds to the diameter of the pot base.

# 6 Familiarising yourself with your appliance

## 6.1 Your new appliance

You can find an overview of the parts of your appliance here.

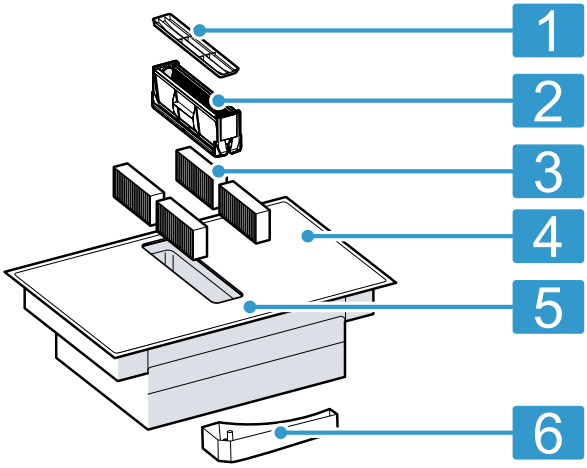


| No. | Designation |
|---|---|
| 1 | Ventilation grille |
| 2 | Grease filter |
| 3 | Odour filter for circulating-air mode or acoustics filter for air extraction mode |
| 4 | Hob |
| 5 | Control panel |
| 6 | Overflow container |

## 6.2 Optional accessories

Depending on the appliance model, various accessories are available and you can obtain these from specialist retailers, from our customer service or from our official website.

| | |
|---|---|
| Cooking sensor | CA060300 |
| Odour filter | CA282112 |
| Acoustic filter | CA084010 |
| Unducted air recirculation kit | CA08201. |
| Ducted air recirculation kit, 60 cm work surface | CA08206. |
| Ducted air recirculation kit, 70 cm work surface | CA08207. |
| Teppan Yaki made from multi-layered material | CA051300 |
| Cast aluminium griddle plate | CA052300 |

## 6.3 Control panel

You can use the control panel to configure some functions of your appliance and to obtain information about the operating status.

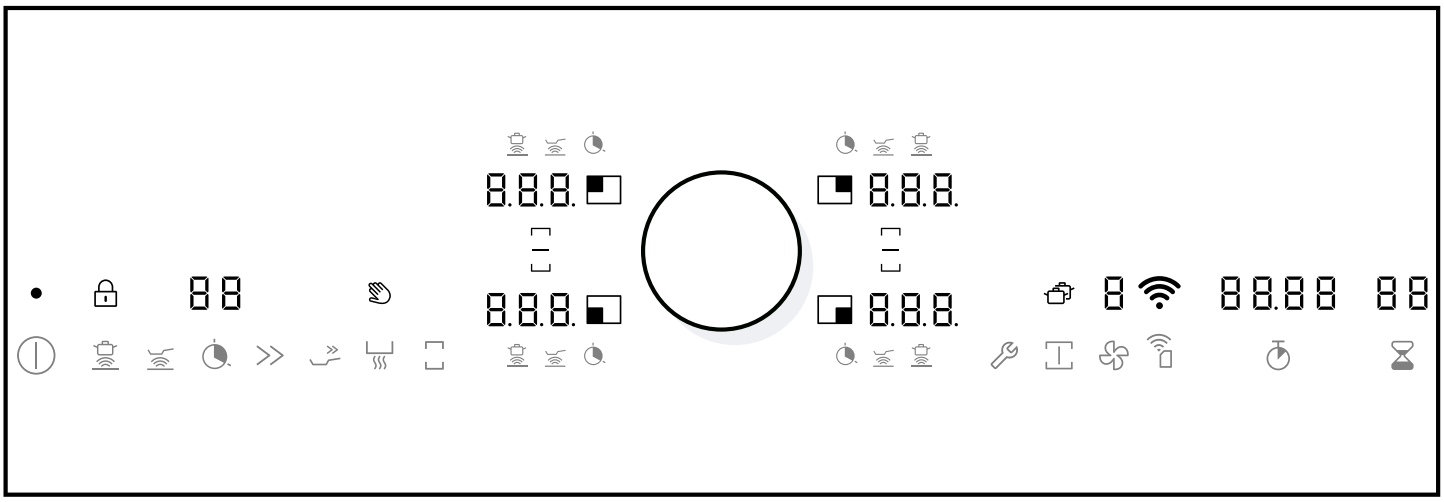

### Touch fields

Touch fields are touch-sensitive surfaces. To select a function, touch the relevant field.

| | |
|---|---|
| | Switching the appliance on and off |
| | Switching on the cooking sensor function |
| | Switching on the frying sensor function |
| | Setting the cooking timer |
| | Activating the booster function for pots |
| | Activating the booster function for pans |
| | Activating the keep warm function |
| | Activating the flex function |
| | Opening the basic settings |
| | Activating the professional cooking function |

| | |
|---|---|
| | Switching between the settings area for the hob and the ventilation system/setting the ventilation level/switching on intensive mode, automatic start and the intermittent function for the ventilation system |
| | Switching on the stopwatch |
| | Setting the short-term timer |
| | Confirming the Home Connect setting |

### Indicators/symbols

The displays show set values and functions.

| | |
|---|---|
| 0 | Operating status |
| | Cooking zone |
| 1-9 | Heat settings/fan settings |
| .5 | Intermediate levels for the heat settings |
| | Cooking sensor function |
| | Frying sensor function |
| | Cooking timer |
| P | Booster function for pots/intensive mode for ventilation |
| b | Booster function for pans |
| L | Keep warm function |
| H/h | Residual heat |
| 00 | Timer function |
| 00.00 | Stopwatch function |
| | Display cleaning protection |
| | Childproof lock |
| | Flex function activated |
| | Flex function deactivated |
| | Transfer function |
| | Ventilation system switched on |
| J | Intermittent function for the ventilation system |
| A | Ventilation system automatic mode |
| r | Fan run-on |
| F CHANGE | Odour filter saturation indicator |
| | Home network |

### Touch fields and displays

When the hob is switched on, the symbols for the currently available touch fields light up white. The displays for the selected functions light up orange.
Touch a symbol to activate the corresponding function. An audible confirmation signal sounds.

- Keep the control panel clean and dry. Moisture reduces its effectiveness.
- Do not place any cookware near the displays or touch fields. The electronics may overheat.

### Cooking zones

You can find an overview of the different cooking zone activations here.
You can find more information on which items of cookware are suitable for induction cooking in "Induction cooking".
→ *"Induction cooking", Page 7*

| Symbol | Cooking zone type | Switching on |
|---|---|---|
| | Single cooking zone | Use cookware of a suitable size. |
| | Flexible cooking zone | You can find more information in "Flexible cooking zone". → *Page 16* |

### Residual heat indicator

The hob has a two-stage residual heat indicator for each cooking zone. This indicates that a cooking zone is still hot. Do not touch the cooking zone if the residual heat indicator is lit.
The following is displayed depending on the amount of residual heat:

- H display: High temperature
- h display: Low temperature

If you remove the cookware from the cooking zone during cooking, the residual heat indicator and the selected heat setting flash alternately.
If you switch off the cooking zone, the residual heat indicator lights up. Even if the hob has already been switched off, the residual heat indicator remains lit for as long as the cooking zone remains warm.

# 7 Operating modes

You can use your appliance in air extraction mode or circulating-air mode.

## 7.1 Air extraction mode

The air which is drawn in is cleaned by the grease filters and conveyed to the exterior by a pipe system.

The air must not be discharged into a flue that is used for exhausting fumes from appliances burning gas or other fuels (not applicable to appliances that only discharge the air back into the room).

- If the exhaust air is to be conveyed into a non-functioning smoke or exhaust gas flue, you must obtain the consent of the heating engineer responsible.
- If the exhaust air is conveyed through the external wall, a telescopic duct should be used.

### 7.2 Air recirculation

The air which is drawn in is cleaned by the grease filters and an odour filter, and conveyed back into the room.

To bind odours in air recirculation mode, you must install an odour filter. The different options for operating the appliance in air circulation mode can be found in our catalogue. Alternatively, ask your dealer. The required accessories are available from specialist retailers, from our after-sales service or from the online shop.

**Note:** When cooking intensively and for a long time, moisture is released into the air in the room. When using the appliance in air recirculation mode, we recommend ventilating the kitchen adequately, e.g. by briefly opening a window to remove excessive moisture.

## 8 Before using for the first time

Implement the settings for the initial configuration. Clean the appliance and accessories.

### 8.1 Setting an operating mode

**Requirement:** When it is delivered, the appliance is set to air recirculation mode.

- To change the appliance to air extraction mode, see Basic settings → *Page 32*.

### 8.2 Setting Home Connect

1. When you first switch on the appliance, you will be prompted to set up your home network. is lit dimly for a few seconds on the display panel. To begin setting up the connection, press .
2. Set up Home Connect.
   → *"Home Connect ", Page 33*
   To exit the initial set-up, press any symbol.

## 9 TwistPad® with twist knob

The TwistPad® is the area in which you can use the twist knob to select the cooking zones and heat settings. The twist knob is magnetic.

### 9.1 Positioning the twist knob

- Place the twist knob in the centre of the area marked on the TwistPad®.
  - Make sure that the twist knob is in the centre of the indicators which delimit the TwistPad® area.

### 9.2 Activating the cooking zone using the twist knob

**Requirement:** The twist knob is placed in the centre of the area marked on the TwistPad®.

- To activate a cooking zone, tilt the twist knob towards the required cooking zone.

### 9.3 Setting the heat setting using the twist knob

**Requirement:** The twist knob is placed in the centre of the area marked on the TwistPad®.

- Turn the twist knob to select the required heat setting.

### 9.4 Removing the twist knob

You can remove the twist knob during the cooking process.

⚠ **WARNING – Risk of burns!**

The hob may continue to heat up. If a metallic object is placed in the TwistPad® area during the 10 minutes after removing the twist knob, the hob may continue to heat up.

- Always switch off the hob using the main switch.
- Remove the twist knob from the TwistPad®.
- ✔ The Wipe protection function is activated for 10 minutes.
- ✔ If the twist knob is not returned to its position before this time elapses, the hob switches off.

### 9.5 Instructions for use

- A strong magnet is located inside the rotary knob. Keep the rotary knob away from magnetic data carriers such as credit cards and cards with magnetic strips. It may damage them. The magnet may also cause faults on televisions and screens.
- The rotary knob is magnetic. Metal particles stuck to the bottom may scratch the surface of the hob. Always clean the twist knob thoroughly. → *Page 39*

# 10 Basic operation

## 10.1 Hob

**Notes**

- If the appliance has not been connected to your home network or the connection has been broken, the network connection initial set-up will be activated whenever you switch on the hob.
- If you place cookware on a flexible cooking zone, the hob detects the cookware and the cooking zone is automatically selected. You can find more information about this under
→ *"Flex Zone", Page 16*.

### Switching on the hob

1. Position the twist knob in the area in which it can be used.
2. Press ①.
✔ The symbols for the cooking zones and the functions available at this time light up.
✔ 0 lights up next to the cooking zones.
✔ The hob is ready for use.

### Selecting the cooking zone and power level

**Note:** If there is cookware on the cooking zone before switching on the appliance, the appliance detects the cookware at the latest 20 seconds after pressing the main switch and selects the cooking zone automatically. Set the heat setting within the next 10 seconds. Otherwise, the appliance switches the cooking zone off again after 20 seconds. If there are several pots and pans on the hob when the appliance is switched on, the appliance only detects one item of cookware.

**Requirement:** The hob is switched on.

1. Select the cooking zone.

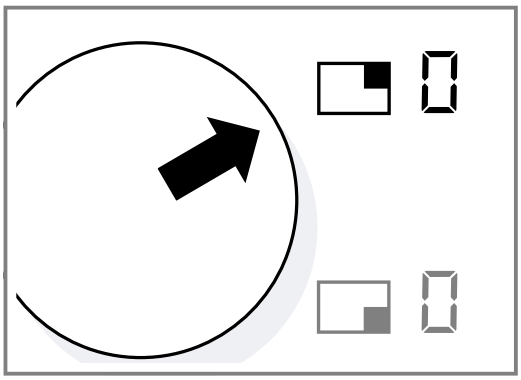

To do this, touch the twist knob in the appropriate area for the required cooking zone.

2. Within the next 10 seconds, turn the twist knob until the required power level appears in the display.

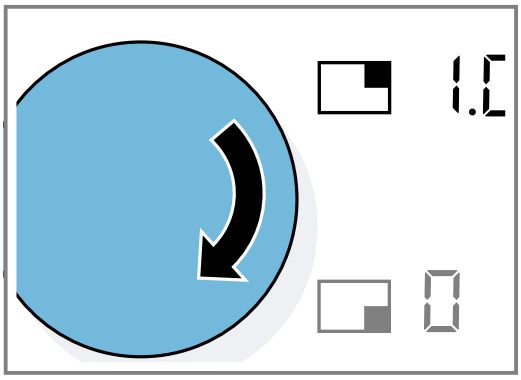

If no cookware is placed on the cooking zone, the power level indicator flashes. After a while, the cooking zone switches itself off.

3. When placing the cookware on the flexible cooking zone, ensure that the cookware is positioned correctly according to size.
→ *"Flex Zone", Page 16*
✔ The cookware is detected and the appliance selects the cooking zone automatically.
4. If the indicators flash after you have changed the settings, check whether the cookware is suitable for induction cooking.
→ *"Cookware test", Page 35*

**Notes**

- In order to protect the appliance's electronic parts from overheating or surge currents, the hob may temporarily reduce the power level.
- In order to prevent the appliance from producing excess noise, the hob may temporarily reduce the power level.

### Changing the power level

1. Select the cooking zone.

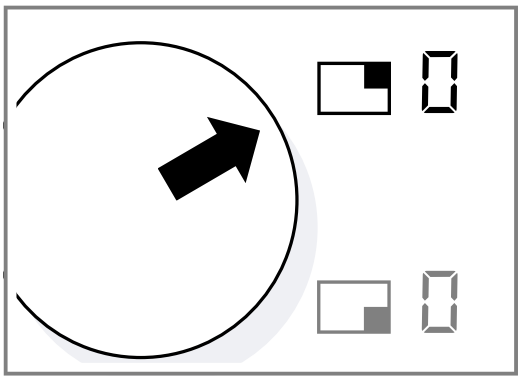

2. Turn the twist knob until the required power level appears in the display.

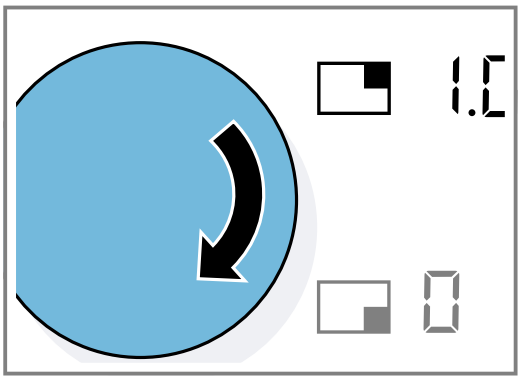

### Switching off the cooking zone

1. Select the cooking zone.
2. Turn the twist knob until the power level 0 lights up in the display.
   – Switch off the ventilation system separately.
   → *"Switching off the ventilation system", Page 13*
✔ The residual heat indicator remains lit until the cooking zones have cooled down sufficiently.

### Switching off the hob

▸ Press ⏻ until the display goes out.
✔ All cooking zones are switched off.
✔ The residual heat indicator remains lit until the cooking zones have cooled down sufficiently.

**Notes**

- The selected settings are stored for 5 seconds after the cooking zone has been switched off.
  If you switch the hob back on during this time, the power levels that were previously set flash. To apply these settings, tap on the twist knob within the next 5 seconds.
  If you do not tap the twist knob or if you press a different touch field, the appliance deletes all previous settings.
- The hob switches off automatically if all cooking zones and the ventilation system have been switched off for more than 20 seconds.

## 10.2 Ventilation system

⚠ **WARNING – Risk of burns!**

The ventilation grille will quickly become extremely hot if it is placed on the hob.

▸ Never place the ventilation grille on the hob.
▸ Do not place any pans on the ventilation grille.
▸ Do not place any hot objects on the ventilation grille.

Never operate the appliance without the overflow container, grease filter or ventilation grille.
Switch on the ventilation system when you start cooking and switch it off again a few minutes after you have finished cooking. This is the most effective way of removing the kitchen fumes.
Always adjust the setting according to the current conditions. To eliminate strong cooking smells, select a high fan setting.

Using tall items of cookware may prevent the extraction system from working at optimum power. You can improve the extraction power using a lid placed at an angle.
Do not block the ventilation openings with objects. Do not place any objects on the ventilation grille. Doing so would reduce the performance of the ventilation system.

### Switching on the ventilation system

1. Press ✣.
✔ ✣ lights up orange.
✔ The ventilation system starts at power level 2.
✔ The power level for the ventilation lights up.
2. During a period of a few seconds, a power level for the ventilation system can be selected. Whilst ✣ lights up orange, use the twist knob to select the required power level.
   **Note:** You cannot change the heat settings for the cooking zones while configuring the power levels for the ventilation system.
   ✣ lights up white as soon as the twist knob is available for setting the heat settings again.
✔ The set power level lights up.

### Changing the ventilation power level

**Requirement:** The ventilation system is switched on.

1. Press ✣.
2. Use the twist knob to select the required power level.
✔ The set power level lights up.

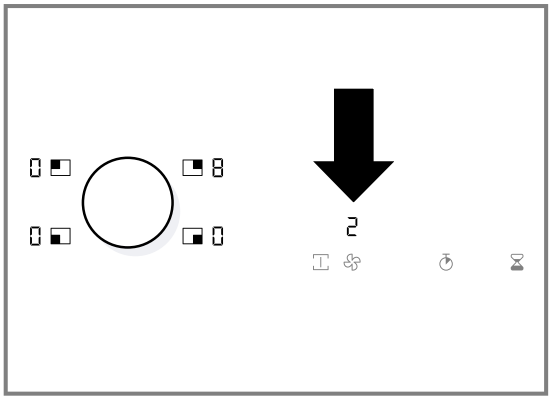

### Switching off the ventilation system

1. Press ✣.
2. Use the twist knob to select the power level 0.
3. To switch to the settings area for the hob, press ✣.

## 10.3 Intensive mode

If particularly strong odours or vapours develop, you can use intensive mode. In intensive mode, the ventilation system works at maximum performance for a short time. It automatically switches back to a low setting after a short time.

### Switching on intensive mode

1. Press ✣.
2. Turn the twist knob until P is displayed.
✔ Intensive mode is now activated.
✔ After 6 minutes, the appliance automatically switches back to power level 3.

### Switching off intensive mode

1. Press ✣.
2. Turn the twist knob until the power level 0 is displayed.
3. To switch to the settings area for the hob, press ✣.

## 10.4 Automatic start

When you start the appliance automatically, you can specify in the basic settings whether, and at which power level, the appliance switches the ventilation system on as soon as you select a heat setting for a cooking zone.
In the Basic settings → *Page 32*, you can set the following options when a heat setting for a cooking zone is selected:

- The ventilation system does not start.
- The ventilation system starts at the power level selected by the sensor.
- The ventilation system starts at a specified power level.

You can also adjust the sensor sensitivity in the basic settings.

## 10.5 Automatic mode with sensor control

In automatic mode, a sensor in the appliance detects the intensity of the cooking odours and roasting odours. The optimal fan speed is automatically switched on depending on the sensor sensitivity setting. If the sensor control reacts too weakly or too strongly, you can change the setting for the sensor sensitivity.

### Switching on automatic mode with sensor control

1. Press ✣.
✔ The ventilation system starts at power level 2.
2. Turn the twist knob to the right until A is displayed.
3. Press ✣.
✔ The optimum power level is set automatically using a sensor.

### Switching off automatic mode with sensor control

1. Press ✣.
2. Use the twist knob to select another power level or turn the twist knob until 0 is displayed.
✔ The power level that is selected is shown on the display panel.
✔ Automatic mode with sensor control is switched off.

## 10.6 Fan run-on

The fan run-on only starts if at least one cooking zone has been switched on for at least one minute. After you switch off the cooking zone, the ventilation system continues to run for a few minutes in order to remove any cooking vapours. The ventilation system then switches off automatically.

If the automatic function is activated with sensor-controlled run-on in the basic settings, the fan run-on switches on automatically after the appliance is switched off.
When you switch off the appliance or all cooking zones, r and ✣ light up white. The fan run-on is switched on.
The appliance switches off the fan run-on when you switch on the appliance and switch a cooking zone back on.

### Switching off the fan run-on

1. Press ✣.
✔ ✣ lights up orange.
2. Use the twist knob to select the power level 0.
3. Press ✣.
✔ The fan run-on is switched off.

## 10.7 Intermittent ventilation

With intermittent ventilation, the ventilation system switches on automatically for 6 minutes every hour.

### Switching on intermittent ventilation

1. Press ✣.
2. Turn the twist knob until J is displayed.
3. Press ✣.
✔ The intermittent function is activated.

**Note:** After the appliance has been switched off, the J and ✣ symbols light up white.

### Switching off intermittent ventilation

1. Press ✣.
2. Turn the twist knob until 0 lights up
3. To switch to the settings area for the hob, press ✣.
✔ Intermittent ventilation is switched off.

## 10.8 Cooking instructions

This is where you can find an overview of useful cooking instructions for dishes or for using cookware.

- When heating up puree, cream soups or thick sauces, stir occasionally.
- To preheat, set heat setting 8-9.
- When cooking with the lid on, reduce the power level as soon as you see steam escaping. The cooking result is not affected by the steam escaping.
- After cooking, place a lid on the cookware until you serve the dish.
- To cook with the pressure cooker, observe the manufacturer's instructions.
- Do not cook food for too long, otherwise nutrients will be lost. The short-term timer enables you to set the optimum cooking time.
- Ensure that the oil does not smoke.
- To brown the food, fry it in small portions, one after the other.
- Some items of cookware may reach high temperatures while the food is cooking. You should therefore use oven gloves.
- You can find recommendations for energy-efficient cooking in
  → *"Saving energy", Page 7*.

## Recommended settings for cooking

This is where you can find an overview about which heat settings are suitable for which food. The cooking time may vary depending on the type, weight, thickness and quality of the food.

| Cooking method | Heat setting | Cooking time in mins |
|---|---|---|
| **Melting** | | |
| Chocolate, coating | 1-1.5 | - |
| Butter, honey, gelatine | 1-2 | - |
| **Heating and keeping warm** | | |
| Stew, e.g. lentil stew | 1.5-2 | - |
| Milk[1] | 1.5-2.5 | - |
| Boiled sausages[1] | 3-4 | - |
| **Defrosting and heating** | | |
| Spinach, frozen | 3-4 | 15-25 |
| Goulash, frozen | 3-4 | 35-55 |
| **Poaching, simmering** | | |
| Potato dumplings[1] | 4.5-5.5 | 20-30 |
| Fish[1] | 4-5 | 10-15 |
| White sauces, e.g. Béchamel sauce | 1-2 | 3-6 |
| Emulsified sauces, e.g. béarnaise sauce, hollandaise sauce | 3-4 | 8-12 |
| **Boiling, steaming, braising** | | |
| Rice, with double the volume of water | 2.5-3.5 | 15-30 |
| Rice pudding[2] | 2-3 | 30-40 |
| Potatoes boiled in their skin | 4.5-5.5 | 25-35 |
| Boiled potatoes | 4.5-5.5 | 15-30 |
| Pasta[1] | 6-7 | 6-10 |
| Stew | 3.5-4.5 | 120-180 |
| Soups | 3.5-4.5 | 15-60 |
| Vegetables | 2.5-3.5 | 10-20 |
| Vegetables, frozen | 3.5-4.5 | 7-20 |
| Stew in a pressure cooker | 4.5-5.5 | - |
| **Braising** | | |
| Rolled roasting joint | 4-5 | 50-65 |
| Pot roast | 4-5 | 60-100 |
| Goulash[2] | 3-4 | 50-60 |
| **Braising or frying with a small amount of oil**[1] | | |
| Escalope, plain or breaded | 6-7 | 6-10 |
| Escalope, frozen | 6-7 | 6-12 |
| Chops, plain or breaded[3] | 6-7 | 8-12 |
| Steak, 3 cm thick | 7-8 | 8-12 |
| Poultry breast, 2 cm thick[3] | 5-6 | 10-20 |
| Poultry breast, frozen[3] | 5-6 | 10-30 |
| Rissoles, 3 cm thick[3] | 4.5-5.5 | 20-30 |
| Hamburgers, 2 cm thick[3] | 6-7 | 10-20 |
| Fish and fish fillet, plain | 5-6 | 8-20 |
| Fish and fish fillet, breaded | 6-7 | 8-20 |
| Fish, breaded and frozen, e.g. fish fingers | 6-7 | 8-15 |

[1] Without lid
[2] Preheat to power level 8-8.5
[3] Turn frequently.

| Cooking method | Heat setting | Cooking time in mins |
|---|---|---|
| Prawns and scampi | 7-8 | 4-10 |
| Sautéing fresh vegetables and mushrooms | 7-8 | 10-20 |
| Stir-fry, vegetables, meat cut in strips Asian-style | 7-8 | 15-20 |
| Stir fry, frozen | 6-7 | 6-10 |
| Pancakes, cooked one after the other | 6.5-7.5 | - |
| Omelette, cooked one after the other | 3.5-4.5 | 3-10 |
| Fried eggs | 5-6 | 3-6 |
| **Deep-frying, 150–200 g per portion in 1–2 l oil, deep-fat fried in portions**[1] | | |
| Frozen products, e.g. chips, chicken nuggets | 8-9 | - |
| Croquettes, frozen | 7-8 | - |
| Meat, e.g. chicken portions | 6-7 | - |
| Fish, breaded or beer-battered | 6-7 | - |
| Vegetables, mushrooms, breaded, beer-battered or tempura | 6-7 | - |
| Small baked items, e.g. doughnuts, beer-battered fruit | 4-5 | - |

[1] Without lid
[2] Preheat to power level 8-8.5
[3] Turn frequently.

# 11 Flex Zone

You can use the Flex cooking zone as a single cooking zone or as two independent cooking zones. The Flex cooking zone consists of four inductors. The inductors work independently of each other and only activate area of the hob that is covered by the cookware.

## 11.1 Cookware positions for a single cooking zone

This is where you can find an overview of the positioning of the cookware.
In order to guarantee good pot detection and heat distribution, position the cookware in the centre.

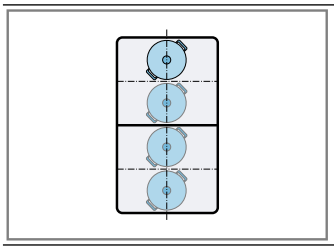

For a diameter of up to 13 cm, position the cookware on one of the four positions as shown in the illustration.

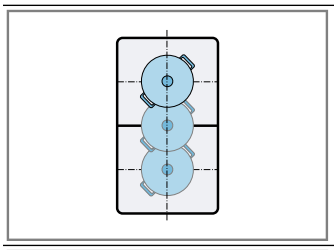

For a diameter over 13 cm, position the cookware on one of the three positions as shown in the illustration.

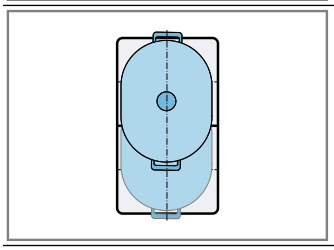

If the cookware covers more than one cooking zone, position the cookware starting on the upper or lower edge of the flexible cooking zone.

## 11.2 Cookware positions for two independent cooking zones

This is where you can find an overview of the positioning of the cookware.
You can use the front and rear cooking zones with two inductors each independently of each other. Set the required power level for each individual cooking zone.

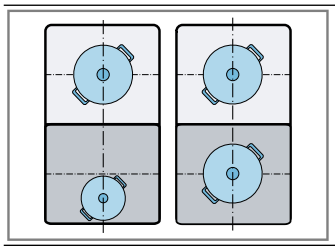

Use just one item of cookware on each cooking zone.

## 11.3 Using the Flex cooking zone as two independent cooking zones

- Use the Flex cooking zone as two independent cooking zones.
  → *"Basic operation", Page 12*

## 11.4 Using the Flex cooking zone as a single cooking zone

**Requirement:** The cooking zones are connected.
→ *"Connecting the two cooking zones", Page 17*

- Use the entire cooking zone.

### Connecting the two cooking zones

1. Set down the cookware.
2. Select one of the two cooking zones assigned to the flexible cooking zone.
3. Press ⊡.

✔ ⊡ lights up.
✔ The Flex cooking zone is activated.
✔ The heat setting lights up in the displays for both cooking zones.

**Notes**

- If the two cooking zones are set to a different heat setting before being linked, switch both cooking zones to heat setting 0 on activation.
- If there is a cooking timer programmed for one cooking zone, this will also be assigned to the second cooking zone when the two are linked.

### Changing the power level

1. Select one of the two cooking zones assigned to the flexible cooking zone.
2. Use the control knob to change the heat setting, use the twist knob to set it.

### Adding new cookware

1. Set down the new cookware.

✔ If correctly positioned, cookware is detected and the cooking zone is selected automatically.
✔ ⊡ flashes.

2. Use the twist knob to confirm the setting within 90 seconds.

✔ The displays stop flashing and the appliance heats the cookware.

**Notes**

- If the displays continue to flash, check whether the cookware is suitable for induction cooking.
- If you move cookware on the cooking zone that is being used or lift it, the hob starts an automatic search and the heat setting that was previously selected is retained.

### Separating the cooking zones

1. Select one of the two cooking zones assigned to the flexible cooking zone.
2. Press ⊡.

✔ ⊡ lights up in the cooking zone display.
✔ The Flex cooking zone is deactivated.
✔ The two cooking zones operate as two independent cooking zones.

**Note:** If you switch off the cooking zone and switch it back on again, the flexible cooking zone is switched back to two independent cooking zones.

# 12 Transfer settings

You can use this function to transfer the settings of one cooking zone to another.
The Transfer settings function can also be used on the flexible cooking zones.
You can find additional information on the correct positioning of cookware in
→ *"Flex Zone", Page 16*

## 12.1 Activating Transfer settings

1. Remove any cookware.

✔ The display for the cooking zone starts flashing.
✔ The cooking zone does not heat up.

2. Set the cookware down on a flexible cooking zone within the next 90 seconds.

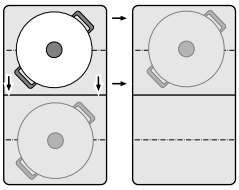

Move the cookware to a cooking zone which is not switched on, which has not yet been preset and on which no other cookware has yet been placed.

✔ The new cooking zone is detected.
✔ ⊡ lights up
✔ The adopted power level flashes in the display.

3. Use the twist knob to select the new cooking zone within 90 seconds.

✔ The settings have been transferred.

**Note:** If the flex function is activated by moving an item of cookware across the flexible cooking zone, the appliance automatically applies the settings.

The appliance also transfers a set cooking time to the new cooking zone. The appliance does not transfer the frying sensor function.
You can only move the booster functions from left to right or from right to left when none of the cooking zones are active.
If you set down a new item of cookware on a different cooking zone before you have confirmed the settings, this function is ready to use for both items of cookware. Confirm the required cooking zone.

If you move several items of cookware, the function is only ready for the item of cookware that was last moved.
During the adjustment time, you can return the cookware to the previous cooking zone. The cooking zone then continues to heat up using the previous setting, without the need for confirmation.

# 13 Professional cooking function

You can use the professional cooking function to display the preset heat settings for each cooking zone.

**Notes**

- You can change the default settings in the Basic settings → *Page 32*.
- You can only set the keep warm function and the flex function in professional cooking mode.
- If an unsuitable item of cookware is set down (e.g. aluminium cookware), the heat setting indicator flashes until this cookware is removed. To check whether your cookware is suitable for induction cooking, take note of the following information: → *"Cookware test", Page 35*

## 13.1 Activating the professional cooking function

**Requirement:** The hob is switched on.

1. Press ⌶.

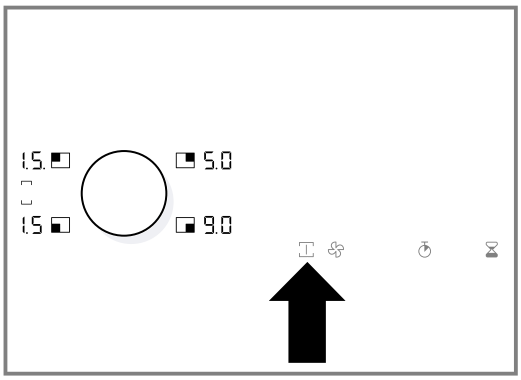


✔ The preset heat settings light up in the cooking zone display.
✔ The cooking zones on the left-hand side are linked.

2. Set down a suitable item of cookware within 8 minutes.

✔ Once the cookware has been detected, the corresponding cooking zone is selected.

3. If required, use the twist knob to adjust the heat setting.

✔ The heat setting indicators for the unoccupied cooking zones start flashing if the adjustment time has elapsed. If you do not touch ⌶, the unused cooking zones switch off.

## 13.2 Extending the professional cooking function

**Requirements**

- The professional cooking function is activated.
- The adjustment time has elapsed.

▸ Press ⌶ again within 90 seconds.

## 13.3 Deactivating the professional cooking function

▸ Press ⌶.

✔ Switch all cooking zones to heat setting 0.
✔ ⌶ lights up white.

## 13.4 Deactivating the professional cooking function automatically

If you do not set down a suitable item of cookware on one or more cooking zones after 8 minutes, ⌶ and the corresponding cooking zone displays start to flash. You can deactivate the professional cooking function or it will end automatically after 90 seconds.

▸ To deactivate the professional cooking function, press ⌶ twice.
If you do not press ⌶, the professional cooking function switches off automatically after 90 seconds.

✔ ⌶ lights up white.
✔ Switch cooking zones without cookware to heat setting 0. Cooking zones that are in use retain the set heat setting.

# 14 Timer function

Your appliance comes with various functions for setting the cooking time.

## 14.1 Cooking timer

The cooking zone automatically switches off after the time that is set has elapsed. You can set a time from 1 minute to 99 minutes.

### Setting the cooking timer

1. Select the cooking zone.
2. Set the required heat setting.
3. Press ◔.

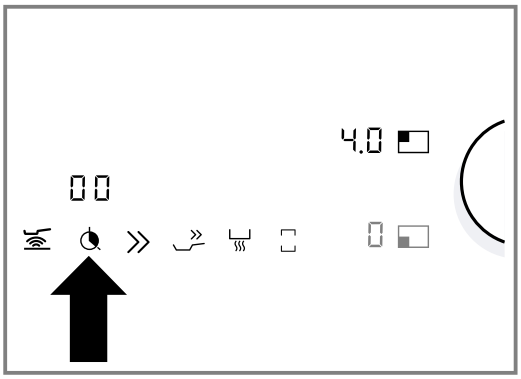


✔ ◔ lights up. 00 lights up in the timer display.

4. Use the twist knob to set the required cooking time.
5. Press ◔ to confirm the selected cooking time.

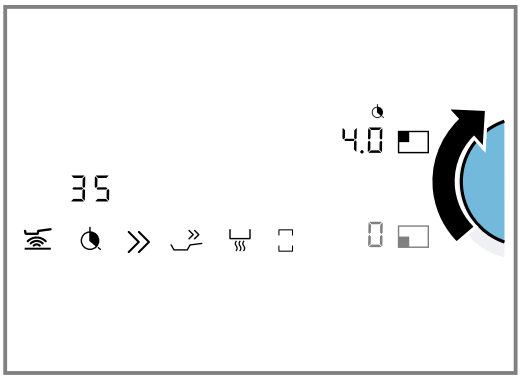


✔ The cooking time begins to elapse.
✔ Once the cooking time has elapsed, the cooking zone switches itself off.
✔ A signal tone sounds.
✔ The heat setting shows 0 and 00 flashes in the timer display.

6. Press any symbol or press the twist knob.

✔ The signal tone stops.
✔ The displays go out.

**Notes**

- The cooking time elapses in the timer display in minutes, the final half a minute is displayed in seconds.
- To call up the remaining cooking time, select the corresponding cooking zone. The cooking time is displayed for 10 seconds.
- If you set a cooking time for several cooking zones, the cooking time that ends first appears in the timer display. The ◔ display lights up orange in the cooking zone.
- If you select the FlexZone as the only cooking zone, the set cooking time for the entire cooking zone is the same.
- When you set a cooking time for a cooking zone and the frying sensor is activated, the cooking time starts counting down immediately and not when the selected temperature setting has been reached.

### Changing the cooking timer

1. Select the cooking zone.
2. Press ◔.
3. Use the twist knob to set the required cooking time.

### Deleting the cooking timer

1. Select the cooking zone.
2. Press ◔.
3. Use the twist knob to set the cooking time to 00.

## 14.2 Short-term timer

You can use the short-term timer to set a time of up to 99 minutes and, once this time has elapsed, a signal tone sounds for 3 minutes. The short-term timer runs independently of all other settings and does not automatically switch off a cooking zone.

### Setting the short-term timer

1. Press ⧗.

✔ 00 appears in the short-term timer display.

2. Use the twist knob to set the required time.
3. Press ⧗ to confirm the selected cooking time.

✔ The time starts to elapse.

### Changing the short-term timer

1. Press ⧗.
2. Use the twist knob to set the required time.

### Deleting the short-term timer

1. Press ⧗.
2. Use the twist knob to set the time to 00.

### Switching off the short-term timer

**Requirement:** Once the time has elapsed, a signal tone sounds. 00 flashes.

▸ Press ⧗.

✔ The display goes out.
✔ The signal tone stops.

## 14.3 Timer plus

You can use Timer plus to activate a stopwatch function. The stopwatch function shows you the elapsed time since the end of the set timer time.

### Setting Timer plus

▸ Press and hold ⧗ for a few seconds before the signal tone ceases.

✔ The display for the stopwatch shows the elapsed time since the end of the set time.
✔ The time that was previously set flashes in the timer display.

### Ending Timer plus

▸ Press and hold ⧗.

✔ The stopwatch function is stopped.
✔ The displays go out.

## 14.4 Stopwatch function

The stopwatch function shows the time (in minutes and seconds (mm.ss)) that has elapsed since the function was activated. The stopwatch function operates independently of all the other settings and does not automatically switch off a cooking zone.
The maximum time is 99 minutes and 59 seconds (99.59). Once this value is reached, the display goes back to 00.00.

### Activating the stopwatch function

- Press ⏱.
- ✔ 00.00 appears in the stopwatch display.
- ✔ The time counts down.

### Interrupting the stopwatch function

1. Press ⏱.
- ✔ The stopwatch function is stopped.
- ✔ The stopwatch displays continue to light up.

2. Press ⏱.
- ✔ The time in the display continues to count down.

### Deactivating the stopwatch function

- Press and hold ⏱.
- ✔ The stopwatch function is stopped.
- ✔ The stopwatch displays go out.
- ✔ The stopwatch function has now been deactivated.

# 15 Booster function for pots

The booster function for pots allows you to heat up large volumes of water more quickly than with power level 9.
The booster function for pots temporarily increases the maximum output of the selected cooking zone.
The booster function for pots is available for one cooking zone, provided the other cooking zone in the same group is not in use.

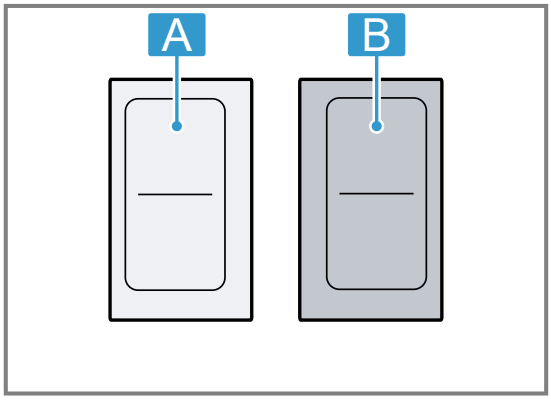


**Note:** For the FlexZone, you can activate the function even if you use this as a single cooking zone.

## 15.1 Activating the booster function for pots

1. Select the cooking zone.
2. Press ».
- ✔ P lights up.
- ✔ The function is activated.

## 15.2 Deactivating the booster function for pots

1. Select the cooking zone.
2. Press ».
3. Press the twist knob or select a different function.
- ✔ P goes out.
- ✔ The cooking zone switches back to power level 9.
- ✔ The function is deactivated.

**Notes**

- In certain circumstances, the booster function for pots may switch itself off automatically in order to protect the electronic elements inside the hob.
- If a power level was set before activating the function, this is automatically applied again after deactivating the function.

# 16 Booster function for pans

The booster function for pans allows you to heat up cookware more quickly than with power level 9.
The booster function for pans is available for one cooking zone, provided the other cooking zone in the same group is not in use.

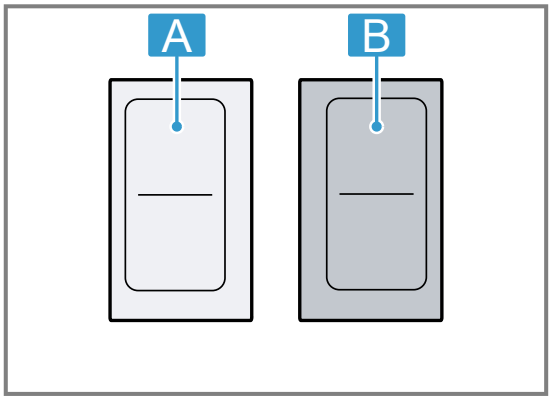


**Note:** For the FlexZone, you can activate the function even if you use this as a single cooking zone.

## 16.1 Recommendations for use

Observe the following recommendations for using the booster function for pans:

- Always use cookware that has not been pre-heated.
- Use pots and pans with a flat base. Do not use cookware with a thin base.
- Never leave empty cookware, oil, butter or lard unattended when it is being heated.
- Do not place a lid on the cookware.
- Place the cookware in the centre of the cooking zone. Ensure that the diameter of the cookware base corresponds to the size of the cooking zone.
- Observe this information on the type, size and positioning of the cookware:
  → *"Induction cooking", Page 7*

## 16.2 Activating the booster function for pans

1. Select the cooking zone.
2. Press ».
- ✔ b lights up.

✔ The function is activated.

### 16.3 Deactivating the booster function for pans

1. Select the cooking zone.
2. Press .
3. Press the twist knob or select a different function.

✔ b goes out.

✔ The cooking zone switches back to power level 9.
✔ The function is deactivated.

**Notes**

- After 30 seconds, the booster function for pans is automatically switched off.
  Then select the appropriate power level for the food.
- If a power level was set before activating the function, this is automatically applied again after deactivating the function.

# 17 Keep-warm function

The keep warm function allows you to melt chocolate or butter and to keep food or cookware warm.

### 17.1 Activating the keep warm function

1. Select the cooking zone.
2. Press within the next 10 seconds.

✔ The L display lights up.

### 17.2 Deactivating the keep warm function

1. Select the cooking zone.
2. Press , turn the twist knob or select another function.

✔ The L display goes out.
✔ The cooking zone switches itself off and the residual heat indicator lights up.

# 18 Frying sensor function

The frying sensor function maintains the correct temperature in the frying pan when frying. This function is available for all cooking zones.
Temperature sensors are located underneath the hob. These monitor the temperature of the base of the frying pan.
The sensors measure the temperature of the cookware throughout the cooking process. This ensures that the cooking power is controlled with high precision to maintain the correct temperature and achieve optimum cooking results.

### 18.1 Advantages when frying

- The cooking zone only continues heating for as long as this is necessary to maintain the temperature. This saves energy and prevents the oil or fat from overheating.
- A signal tone sounds when the empty pan has reached the optimum temperature for adding oil and for adding the food.

**Notes**

- Do not place a lid on the pan. Otherwise, the function is not activated correctly. Use a splatter guard to prevent fat from spitting out.
- Use oil or fat that is suitable for stir fries. If you are using butter, margarine, cold-pressed olive oil or lard, use temperature setting 1 or 2.
- Never leave a frying pan unattended during heating, regardless of whether or not it contains food.
- If the cooking zone is a higher temperature than the cookware or vice versa, the frying sensor is not activated correctly.
- For frying with a large amount of oil, always use the cooking sensor function. For frying with a large amount of oil in a pan, set the temperature to 170-180 °C.

### 18.2 Recommended cookware

Special cookware has been developed for this function, which delivers the best results.

The recommended cookware is available from customer service, specialist retailers or our online shop www.gaggenau.com.

**Note:** You can also use other cookware. Depending on the composition of the cookware, the achieved temperature may differ from the selected temperature level.

### 18.3 Temperature levels

| Levels | | Suitable for |
|---|---|---|
| 1 | Very low | Preparing and reducing sauces, stewing vegetables and frying food in extra virgin olive oil, butter or margarine. |
| 2 | Low | Frying food in extra virgin olive oil, butter or margarine, e.g. omelettes. |
| 3 | Low - Medium | Frying fish and thick food such as meatballs and sausages. |
| 4 | Medium - High | Frying steaks (well done), breaded frozen products, and thin food such as schnitzel, strips of meat and vegetables. |
| 5 | High | Frying food at high temperatures, e.g. steaks (rare or medium), potato fritters and fried potatoes |

## 18.4 Frying sensor functions

The overview shows the available function settings for the frying sensor function.

| Frying sensor function | Temperature settings | Availability | Activation |
|---|---|---|---|
| Frying with a little oil | 1, 2, 3, 4, 5 | All cooking zones | |

## 18.5 Switching on the frying sensor function

1. Select the appropriate heat setting from the overview.
2. Place the empty cookware on the cooking zone.
3. Select the cooking zone.
4. Press .

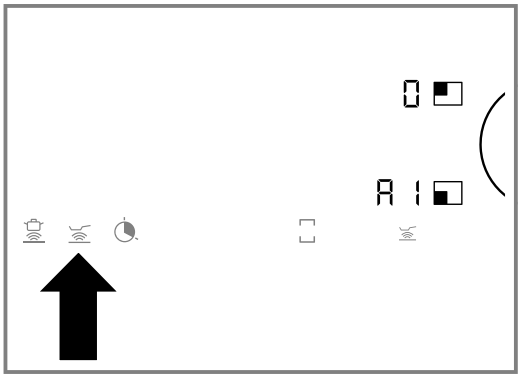

✔ lights up.
✔ The frying temperature A1 lights up.

5. Within the next 10 seconds, set the required heat setting with the twist knob.

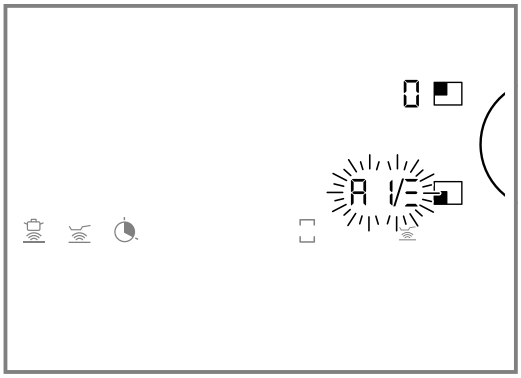

✔ In the display, the progress of the heating process flashes from _ to ‾ alternately with the set heat setting. Once the set frying temperature has been reached, a signal sounds and the heating indicator goes out. The temperature setting lights up.

6. Once the frying temperature has been reached, add the oil first and then the food to the pan.

**Note:** Turn the food so that it does not burn.

## 18.6 Switching off the frying sensor function

1. Select the cooking zone.
2. Press  or use the twist knob to set the temperature setting 0.

✔ A signal tone sounds.
✔ goes out.
✔ The function is deactivated.

## 18.7 Settings for cooking with the frying sensor

The table shows which temperature level 🌡 is suitable for which food. The frying time (◷ min) may vary depending on the type, weight, thickness and quality of the food.
The set temperature level varies depending on the cookware that is used. Preheat the empty pan. Add oil and the food after the signal tone sounds.

| | 🌡 | ◷ min |
|---|---|---|
| **Meat** | | |
| Escalope, plain [1] | 4 | 6-10 |
| Escalope, breaded [1] | 4 | 6-10 |
| Fillet [2] | 4 | 6-10 |
| Chops [1] | 3 | 10-15 |
| Cordon bleu [1] | 4 | 10 - 15 |
| Wiener schnitzel [1] | 4 | 10-15 |
| Steak, rare, 3 cm thick [2] | 5 | 6-8 |
| Steak, medium, 3 cm thick [2] | 5 | 8-12 |
| Steak, well done, 3 cm thick [1] | 4 | 8-12 |
| Poultry breast, 2 cm thick [1] | 3 | 10-20 |
| Meat cut into strips [3] | 4 | 7-12 |
| Gyros [3] | 4 | 7-12 |
| Bacon [1] | 2 | 5 - 8 |
| Minced meat [3] | 4 | 6-10 |
| Hamburgers, 1.5 cm thick [1] | 3 | 6-10 |
| Patties, 2 cm thick [1] | 3 | 10-20 |
| Filled rissoles [1] | 3 | 10-20 |
| Boiled sausages [1] | 3 | 8-20 |
| Fresh sausages [1] | 3 | 8-20 |
| **Fish** | | |
| Fish fillet, plain [1] | 4 | 10-20 |
| Fish fillet, breaded [1] | 3 | 10-20 |
| Scampi [1] | 4 | 4 - 8 |
| Prawns [1] | 4 | 4 - 8 |
| Fish, fried, whole [1] | 3 | 10-20 |
| **Egg dishes** | | |
| Fried eggs in butter [4] | 2 | 2-6 |

[1] Turn frequently.
[2] Add oil and the food after the signal tone.
[3] Stir regularly.
[4] Add butter and the food after the signal tone sounds.
[5] Cooking time per serving. Fry one portion after the other.
[6] Add water after the signal tone. As soon as the water has boiled, add the food.
[7] Add the food after the signal tone sounds.

| | 🌡 | ◷ min |
|---|---|---|
| Fried eggs [2] | 4 | 2-6 |
| Scrambled eggs [3] | 2 | 4-9 |
| Omelette [5] | 2 | 3-6 |
| Pancakes [5] | 5 | 1,5-2,5 |
| French toast [5] | 3 | 4-8 |
| Raisin pancake [5] | 3 | 10-15 |
| **Vegetables and legumes** | | |
| Garlic [3] | 2 | 2-10 |
| Onions, braised [3] | 2 | 2-10 |
| Onion rings [3] | 3 | 5-10 |
| Courgette [1] | 3 | 4-12 |
| Aubergine [1] | 3 | 4-12 |
| Peppers [1] | 3 | 4-15 |
| Green asparagus [1] | 3 | 4-15 |
| Mushrooms [3] | 4 | 10-15 |
| Vegetables, braised in oil [3] | 1 | 10-20 |
| Vegetables, glazed [3] | 3 | 6-10 |
| **Potatoes** | | |
| Fried potatoes, boiled in their skin [3] | 5 | 6-12 |
| Chips (made from raw potatoes)[3] | 4 | 15-25 |
| Potato pancakes [5] | 5 | 2,5-3,5 |
| Swiss rösti [4] | 2 | 50-55 |
| Glazed potatoes [3] | 3 | 10-15 |
| **Sauces** | | |

[1] Turn frequently.
[2] Add oil and the food after the signal tone.
[3] Stir regularly.
[4] Add butter and the food after the signal tone sounds.
[5] Cooking time per serving. Fry one portion after the other.
[6] Add water after the signal tone. As soon as the water has boiled, add the food.
[7] Add the food after the signal tone sounds.

| | 🌡 | ◷ min |
|---|---|---|
| Tomato sauce with vegetables [3] | 1 | 25-35 |
| Béchamel sauce [3] | 1 | 10-20 |
| Cheese sauce [3] | 1 | 10-20 |
| Reducing sauces [3] | 1 | 25-35 |
| Sweet sauces [3] | 1 | 15-25 |
| **Frozen products** | | |
| Escalope [1] | 4 | 15-20 |
| Cordon bleu [1] | 4 | 10 - 30 |
| Poultry breast [1] | 4 | 10-30 |
| Chicken nuggets [1] | 4 | 10-15 |
| Gyros [3] | 4 | 10-15 |
| Kebab [3] | 4 | 10-15 |
| Fish fillet, plain [1] | 3 | 10-20 |
| Fish fillet, breaded [1] | 3 | 10-20 |
| Fish fingers [1] | 4 | 8-12 |
| Chips, in the frying pan [3] | 5 | 4-6 |
| Stir-fries [3] | 3 | 6-10 |
| Spring rolls [1] | 4 | 10-30 |
| Camembert [1] | 3 | 10-15 |
| **Other** | | |
| Fried cheese [1] | 3 | 7-10 |
| Croutons [3] | 3 | 6-10 |
| Dried ready meals [6] | 1 | 5-10 |
| Almonds, roasted [7] | 4 | 3-15 |
| Nuts, roasted [7] | 4 | 3-15 |
| Pine nuts, toasted [7] | 4 | 3-15 |

[1] Turn frequently.
[2] Add oil and the food after the signal tone.
[3] Stir regularly.
[4] Add butter and the food after the signal tone sounds.
[5] Cooking time per serving. Fry one portion after the other.
[6] Add water after the signal tone. As soon as the water has boiled, add the food.
[7] Add the food after the signal tone sounds.

# 19 Cooking sensor function

You can use the cooking sensor function to heat, simmer or cook food, prepare food in a pressure cooker or fry it in a pan with sufficient oil at a controlled temperature. This function is available for all cooking zones.
A wireless temperature sensor is required for the cooking sensor function.
The wireless cooking sensor is stuck to the saucepan, measures the temperature of the cookware throughout the cooking process and forwards the information about the temperature of the cookware to the control panel.
This ensures that the cooking power is controlled with high precision to maintain the correct temperature and achieve optimum cooking results.

If required, you can purchase a wireless cooking sensor at a later time from specialist retailers, our technical customer service or our official website.
You can find information about the wireless cooking sensor in the section entitled
→ *"Wireless cooking sensor", Page 30*

## 19.1 Advantages of the cooking sensor function

- The cooking zone only continues heating for as long as this is necessary to maintain the temperature. This saves energy. Oil or fat do not overheat.
- The temperature is continuously monitored. This prevents the food from spilling over. You do not need to adjust the temperature.

- A signal tone sounds once the water or oil has reached the optimum temperature for adding the food. Exceptions for food that is added at the beginning can be found in the Overview → *Page 26*.

**Notes**

- Only use cookware with a completely flat and thick base. Do not use cookware with a thin base or deformed base.
- Fill the cookware so that the contents reach high enough to cover the cooking sensor's silicone patch.
- Always use the frying sensor function for frying with just a little oil.
- Position the cookware in such a way that the cooking sensor is pointing towards the outer side of the hob.
- Do not remove the cooking sensor from the cookware during cooking.
- Remove the wireless cooking sensor from the cookware after cooking. Be careful as the cooking sensor may be very hot.

## 19.2 Suitable cookware

Select the cooking zone that best matches the diameter of the base of the cookware. Place the cookware in the centre of the cooking zone.

For the cooking functions, use cookware that is tall enough that, when the required volume of water is added, the water level is higher than the silicone patch for the wireless cooking sensor.
Any cookware that is suitable for induction cooking can be used with the cooking functions. You can find information on which types of cookware can be used with an induction hob in
→ *"Induction cooking", Page 7*.
The Overview → *Page 24* lists the suitable cookware for each function.

## 19.3 Temperature levels

| Cooking functions | Temperature range | Suitable for |
|---|---|---|
| Heating, keeping warm | 60 - 70 °C | E.g. soups, punch |
| Poaching | 80 - 90 °C | E.g. rice, milk |
| Boiling | 90 - 100 °C | E.g. pasta, vegetables |
| Cooking in a pressure cooker | 110 - 120 °C | E.g. chicken, stew. |
| Frying with a large amount of oil in the pan | 170 - 180 °C | E.g. doughnuts, meatballs |

## 19.4 Cooking sensor function

The overview shows the available function settings for the cooking sensor function.

| Cooking sensor function | Temperature settings | Cookware | Availability | Activation |
|---|---|---|---|---|
| Heating, keeping warm | 70°°C | | All cooking zones | |
| Poaching in milk | 85°°C | | All cooking zones | |
| Poaching in water | 90°°C | | All cooking zones | |
| Boiling | 100°°C | | All cooking zones | |
| Cooking in a pressure cooker | 115°°C | | All cooking zones | |
| Deep-frying at a low temperature | 160°°C | | All cooking zones | |
| Deep-frying at a medium temperature | 170°°C | | All cooking zones | |
| Deep-frying at a high temperature | 180°°C | | All cooking zones | |

## 19.5 Tips for cooking with the cooking sensor function

- "Heating/keep-warm" function: Frozen products in portions, e.g. spinach. Place the frozen product in the cookware. Add the volume of water specified by the manufacturer. Cover the cookware and set the temperature to 70 °C. Stir occasionally.
- "Poaching" function: Thicken food, e. g. sauces. Bring the food to the boil at the recommended temperature. Once the food has thickened, simmer at 85 °C.
  After the signal tone sounds, keep the food warm at this temperature for the required time.
- "Boiling" function: Heat water with the lid on without it boiling over. Set the temperature to 100 °C.
- "Cooking in a pressure cooker" function: Follow the manufacturer's recommendations. After the signal tone sounds, continue cooking for the recommended time. Set the temperature to 115 °C.
- "Frying with a large amount of oil in the pan" function: Heat the oil with the lid on. When the signal tone sounds, remove the lid and add the food. Set the temperature to 175 °C.

**Notes**

- Make sure that the silicone patch is completely dry before cooking.
- Always boil with the lid on except when using the "Frying with a large amount of oil in the pan" function. Then set the temperature to 170 °C.
- If no signal tone sounds, make sure that there is a lid on the cookware. For optimum use of the cooking functions, always use a lid, except when you use the "Frying with a large amount of oil in the pan" function.
- Never leave oil unattended when it is being heated. Use oil or fat that is suitable for deep-frying. Do not use a mixture of different cooking fats and oils, e.g. oil and lard, since such mixtures may foam up when hot.
- If you are not satisfied with the cooking result, e.g. when cooking potatoes, next time use more water but keep the recommended temperature setting.

## 19.6 Setting the boiling point

The point at which water starts to boil depends on the height of your home above sea level. You can change the boiling point if water is boiling too strongly or not strongly enough.

1. Select the basic setting c5.
   → *"Basic settings", Page 32*
2. The basic setting is set to 3 by default. If your home is located at a height of between 200 and 400 metres above sea level, you do not need to set the boiling point. If it is not, select the setting that matches your home's height above sea level.
   → *"Overview of the boiling point settings", Page 25*

**Note:** The 100 °C temperature setting provides efficient cooking even if the water does not bubble very strongly during the heating process. If you are not satisfied with the cooking result, however, you can change the boiling point setting.

### Overview of the boiling point settings

The setting values for the boiling point depend on the height of your home.

| Height | Setting value c5 |
|---|---|
| 0-100°m | 1 |
| 100-200°m | 2 |
| 200-400°m | 3[1] |
| 400-600°m | 4 |
| 600-800°m | 5 |
| 800-1000°m | 6 |
| 1000-1200°m | 7 |
| 1200-1400°m | 8 |
| Above 1400°m | 9 |

[1] Basic setting

## 19.7 Connecting the wireless cooking sensor to the control panel

1. Select the basic setting c5.
   → *"Basic settings", Page 32*
   ✔ lights up white.
2. Press .
   ✔ A signal tone sounds.
   ✔ lights up orange.
   ✔ The indicators light up white and the cooking sensor displays on the cooking zones flash.
3. Press  on the wireless cooking sensor within the next 30 seconds.
   **Detection successful:** The wireless temperature sensor is detected within a few seconds. Three short beeps sound and the  symbol changes from orange to white. The cooking sensor displays on the cooking zones go out.
   **Detection failed:** Five beeps sound.  changes from orange to white. The cooking sensor displays on the cooking zones go out.
   **Note:**
   If there is a fault with the wireless cooking sensor, the connection may not be established correctly for the following reasons:
   - Bluetooth communication error
   - You have not pressed the symbol on the cooking sensor within 30 seconds of selecting the cooking zone.
   - The battery in the cooking sensor is flat.
4. If the connection cannot be established correctly due to a fault, reset the cooking sensor → *Page 25* and repeat the connection procedure.
5. If the connection cannot be established correctly due to a transmission error, repeat the connection procedure.
6. If a connection cannot be established, inform customer service.
   ✔ The cooking sensor function is available as soon as the cooking sensor is connected to the control panel.

## 19.8 Resetting the wireless cooking sensor

1. Press and hold  for 8-10 seconds.

While you are doing this, the cooking sensor's LED indicator lights up three times.
✔ The reset starts when the LED lights up for the third time.
2. Do not press again.
✔ When the LED goes out, this means that the wireless cooking sensor has been reset.
3. Repeat the connection procedure from step 2.
→ *Page 25*

## 19.9 Activating the cooking sensor function

**Requirements**
- The hob is switched on.
- The connection is established between the wireless cooking sensor and the control panel.
→ *"Connecting the wireless cooking sensor to the control panel", Page 25*

1. Attach the cooking sensor to the cookware.
2. Place the cookware with sufficient liquid in the middle of the required cooking zone and always put a lid on.
3. Use the twist knob to select the required cooking zone.
✔ 0 appears in the display for the cooking zone.
4. Press in the control panel.
✔ A signal tone sounds.
✔ lights up in the display for the cooking zone.
5. Press on the wireless cooking sensor.

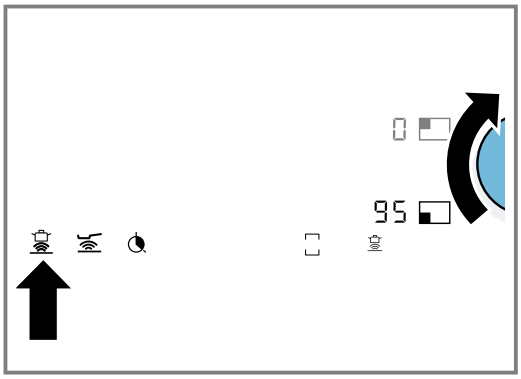


✔ Once the cooking sensor has been detected, the default temperature of 95 °C lights up in the display.

6. Set the required temperature using the twist knob.

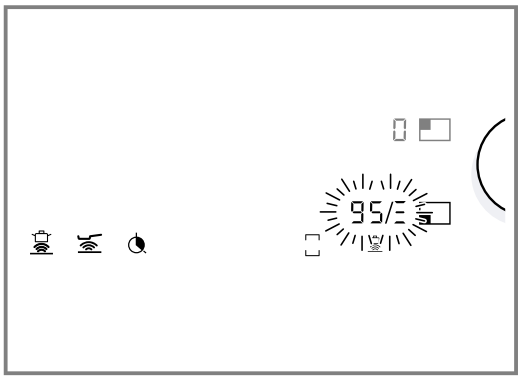


You can change the temperature by increments of 5 °C.
✔ The progress of the heating process lights up in the display from _ to E. The display of the heating process flashes alternately with the set temperature.
✔ Once the set temperature has been reached, a signal tone sounds and the heat-up indicator goes out. The selected temperature lights up again.
7. When the signal tone sounds, remove the lid and add the food.
Keep the lid on the pan during cooking.
**Note:** Do not cover the pan when using the "Frying with a large amount of oil in the pan" function.

## 19.10 Deactivating the cooking sensor function

You can deactivate the cooking sensor function in a number of ways.
▸ Select the cooking zone and press .
Select the cooking zone and set the power level 0 .
Press on the wireless cooking sensor.
✔ A signal tone sounds.
✔ goes out in the display.

## 19.11 Recommendations for cooking with the cooking sensor function

The following overview shows a selection of dishes and is arranged by food type. The temperature and the cooking time depend on the amount, the condition and the quality of the food.

| Meat | Temperature in °C | Total cooking time from signal tone (mins) |
|---|---|---|
| **Poaching** | | |
| Sausages[1] | 90 | 10-20 |
| **Boiling** | | |
| Meatballs[1] | 100 | 20-30 |
| Chicken for soup[1] | 100 | 60-90 |
| Viennese boiled beef[1] | 100 | 60-90 |

[1] Pre-heat and cook with the lid on. Add the food after the signal tone.
[2] Add the food right at the beginning.
[3] Heat the oil with the lid on. Fry one portion after the other without the lid on.

| Meat | Temperature in °C | Total cooking time from signal tone (mins) |
|---|---|---|
| **Cooking in a pressure cooker** | | |
| Chicken in a pressure cooker[2] | 115 | 15-25 |
| Beef in a pressure cooker[2] | 115 | 15-25 |
| **Fry with a large amount of oil** | | |
| Deep-frying chicken pieces[3] | 170 | 10-15 |
| Deep-frying meatballs[3] | 170 | 10-15 |

[1] Pre-heat and cook with the lid on. Add the food after the signal tone.
[2] Add the food right at the beginning.
[3] Heat the oil with the lid on. Fry one portion after the other without the lid on.

| Fish | Temperature in °C | Total cooking time from signal tone (mins) |
|---|---|---|
| **Poaching** | | |
| Braising fish[1] | 90 | 15-20 |
| **Fry with a large amount of oil** | | |
| Deep-frying fish in beer batter[2] | 170 | 10-15 |
| Deep-frying breaded fish[2] | 170 | 10-15 |

[1] Pre-heat and cook with the lid on. Add the food after the signal tone.
[2] Heat the oil with the lid on. Fry one portion after the other without the lid on.

| Egg dishes | Temperature in °C | Total cooking time from signal tone (mins) |
|---|---|---|
| **Boiling** | | |
| Boiling eggs[1] | 100 | 5-10 |

[1] Add the food right at the beginning.

| Vegetables and legumes | Temperature in °C | Total cooking time from signal tone (mins) |
|---|---|---|
| **Boiling** | | |
| Broccoli[1] | 100 | 10-20 |
| Cauliflower[1] | 100 | 10-20 |
| Brussels sprouts[1] | 100 | 30-40 |
| Green beans[1] | 100 | 15-30 |
| Chickpeas[2] | 100 | 60-90 |
| Peas[1] | 100 | 15-20 |
| Lentils[2] | 100 | 45-60 |
| **Cooking in a pressure cooker** | | |
| Vegetables in a pressure cooker[2] | 115 | 3-6 |
| Chickpeas in a pressure cooker[2] | 115 | 25-35 |
| Haricot beans in a pressure cooker[2] | 115 | 25-35 |
| Lentils in a pressure cooker[2] | 115 | 10-20 |
| **Fry with a large amount of oil** | | |
| Deep-frying breaded vegetables[3] | 170 | 4-8 |
| Deep-frying vegetables in beer batter[3] | 170 | 4-8 |
| Deep-frying breaded mushrooms[3] | 170 | 4-8 |
| Deep-frying mushrooms in beer batter[3] | 170 | 4-8 |

[1] Pre-heat and cook with the lid on. Add the food after the signal tone.
[2] Add the food right at the beginning.
[3] Heat the oil with the lid on. Fry one portion after the other without the lid on.

| Potatoes | Temperature in °C | Total cooking time from signal tone (mins) |
|---|---|---|
| **Poaching** | | |
| Cooking potato dumplings[1] | 85 | 30-40 |
| **Boiling** | | |
| Boiling potatoes[2] | 100 | 30-45 |
| **Cooking in a pressure cooker** | | |
| Potatoes in a pressure cooker[2] | 115 | 10-20 |

[1] Pre-heat and cook with the lid on. Add the food after the signal tone.
[2] Add the food right at the beginning.

| Pasta and cereals | Temperature in °C | Total cooking time from signal tone (mins) |
|---|---|---|
| **Poaching** | | |
| Rice[1] | 90 | 25-35 |
| Polenta[2] | 85 | 3-8 |
| Semolina pudding[2] | 85 | 5-10 |
| **Boiling** | | |
| Pasta[2] | 100 | 7-10 |
| Pastry parcels and filled dumplings[2] | 100 | 6-15 |
| **Cooking in a pressure cooker** | | |
| Rice in a pressure cooker[3] | 115 | 5-8 |

[1] Pre-heat and cook with the lid on. Add the food after the signal tone.
[2] Stir regularly.
[3] Add the food right at the beginning.

| Soups | Temperature in °C | Total cooking time from signal tone (mins) |
|---|---|---|
| **Poaching** | | |
| Instant cream soups[1] | 90 | 10-15 |
| **Boiling** | | |
| Home-made broths[2] | 100 | 60-90 |
| Instant soups[1] | 100 | 5-10 |
| **Cooking in a pressure cooker** | | |
| Home-made broths in a pressure cooker[2] | 115 | 20-30 |

[1] Stir regularly.
[2] Add the food right at the beginning.

| Desserts | Temperature in °C | Total cooking time from signal tone (mins) |
|---|---|---|
| **Poaching** | | |
| Rice pudding[1] | 85 | 40-50 |
| Porridge[1] | 85 | 10-15 |
| Chocolate pudding[1] | 85 | 3-5 |
| **Boiling** | | |
| Compote[2] | 100 | 15-25 |
| **Fry with a large amount of oil** | | |
| Deep-frying jam-filled doughnuts[3] | 160 | 5-10 |
| Deep-frying doughnuts[3] | 160 | 5-10 |
| Deep-frying buñuelos[3] | 160 | 5-10 |

[1] Stir regularly.
[2] Add the food right at the beginning.
[3] Heat the oil with the lid on. Fry one portion after the other without the lid on.

| Frozen products | Temperature in °C | Total cooking time from signal tone (mins) |
|---|---|---|
| **Keeping warm, heating** | | |
| Vegetables in cream sauce[1] | 70 | 15-20 |
| **Boiling** | | |
| Green beans[2] | 100 | 15-30 |
| **Fry with a large amount of oil** | | |
| Deep-frying French fries[3] | 180 | 4-8 |

[1] Stir regularly.
[2] Pre-heat and cook with the lid on. Add the food after the signal tone.
[3] Heat the oil with the lid on. Fry one portion after the other without the lid on.

| Miscellaneous | Temperature in °C | Total cooking time from signal tone (mins) |
|---|---|---|
| **Keeping warm, heating** | | |
| Heating goulash soup[1] | 70 | 10-20 |
| Heating mulled wine[1] | 70 | 5-15 |
| **Poaching** | | |
| Heating milk[1] | 85 | 3-10 |

[1] Add the food right at the beginning.

# 20 Childproof lock

The hob is equipped with a childproof lock. You can use this to prevent children from switching on the hob.

## 20.1 Activating the childproof lock

**Requirement:** The hob is switched off.

- ▸ Remove the twist knob from the hob.
- ✔ A signal tone sounds.
- ✔ 🔒 lights up for 10 seconds.
- ✔ The hob is now locked.

**Note:** If the hob is switched on when you remove the twist knob, the appliance will be locked for 10 minutes. If the twist knob is not put back on after 10 minutes, the hob switches itself off and the childproof lock is activated.

## 20.2 Deactivating the childproof lock

- ▸ Place the twist knob on the TwistPad®.

# 21 Locking the control panel for cleaning

You can use this function to lock the control panel for cleaning for a short time. You can now wipe over the surface of the control panel without altering the settings.

## 21.1 Activating the lock on the control panel for cleaning purposes

- ▸ Remove the twist knob from the hob.
- ✔ A signal tone sounds.
- ✔ The 🧽 indicator and the hob settings flash.
- ✔ The appliance stops heating.
- ✔ If a cooking timer is programmed, this is paused.
- ✔ The control panel is locked for 10 minutes.

## 21.2 Deactivating the lock on the control panel for cleaning purposes

- ▸ Put the twist knob back on within 10 minutes.
- ✔ The control panel is unlocked.
- ✔ The hob continues to heat using the previous settings.

# 22 Automatic switch-off

If you operate a cooking zone for an extended period and do not change any settings, the automatic switch-off is activated. Depending on which power level has been selected, the cooking zone switches off automatically after 1 to 10 hours.

The cooking zone stops heating. A signal tone sounds and the residual heat indicator h or H appears in the display for the cooking zone.
You can select the cooking zone again at any time and reset it.

# 23 Wireless cooking sensor

To use the cooking sensor function, you must purchase a wireless cooking sensor.
You can purchase the wireless cooking sensor from customer service, in our online shop or in a specialist shop www.gaggenau.com.

## 23.1 Scope of delivery

After unpacking all of the parts, check for any transport damage and for completeness of delivery.

- A Wireless cooking sensor
- B Silicone patch
- C Template

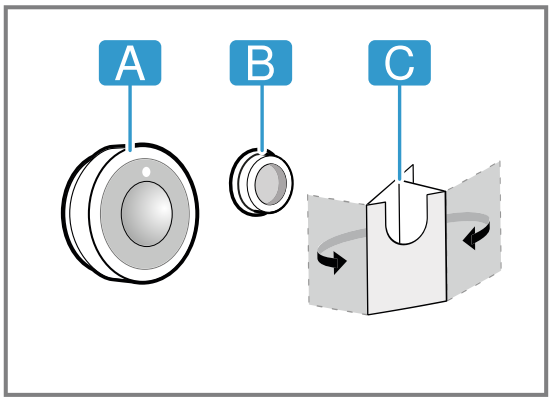


## 23.2 Attaching the silicone patch

The silicone patch secures the cooking sensor to the cookware. For fitting on the cookware:

1. The adhesive area on the cookware must be free from grease. Clean and dry the container thoroughly, and rub the adhesive area using alcohol, for example.
2. Remove the protective film from the silicone patch. Adhere the silicone patch to the outside of the cookware in the correct place using the enclosed template as a guide.

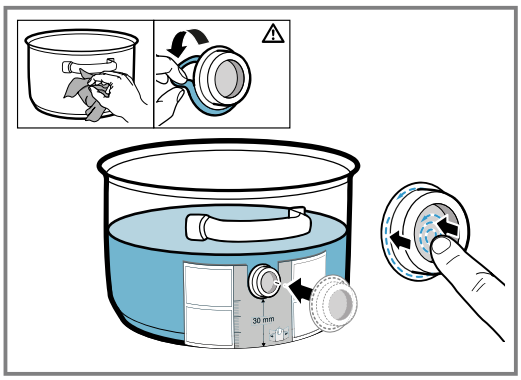

3. Press down all over the surface of the silicone patch, including in the centre.
4. Leave the adhesive to dry for one hour. Do not use or rinse out the cookware during this time.

**Note:** If the silicone patch comes loose, use a new one. If required, you can purchase a set with five silicone patches from specialist retailers, from our customer service or on our official website www.gaggenau.com by quoting the article number 17007119.

All adhesives break down over time when they are stored. To prevent this from happening, place the silicone bases on their containers as soon as they are cleaned.

## 23.3 Attaching the wireless cooking sensor

1. Ensure that the silicone patch is completely dry before attaching the cooking sensor.
2. Attach the cooking onto the silicone patch so that it fits perfectly.

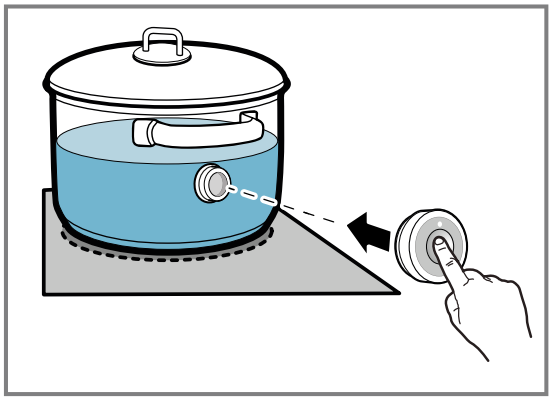

## 23.4 Replacing the battery

If the LED on the wireless cooking sensor does not light up when pressed, the battery is flat. Replacing the battery:

1. Remove the silicone cover from the lower section of the cooking sensor housing and remove both screws using a screwdriver.

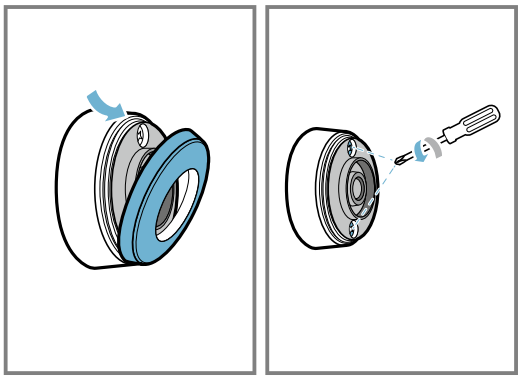

2. Open the cooking sensor cap and remove the battery from the base.

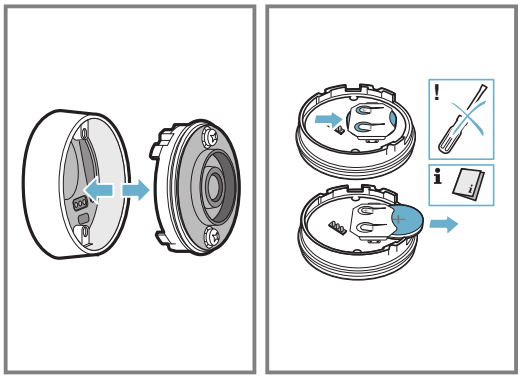

3. Insert a new battery, observing the instructions for the battery poles. Only use premium-quality CR2032 batteries.

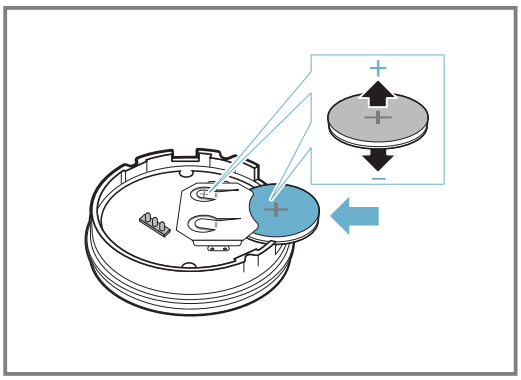

**Note:** Do not use any metal objects to remove the battery. Do not touch the battery connection points.

4. Replace the cap on the cooking sensor. The indentations for the screws on the cap must be aligned with the indentations on the lower section of the housing. Use a screwdriver to tighten the screws and secure the silicone cover on the lower section of the cooking sensor housing.

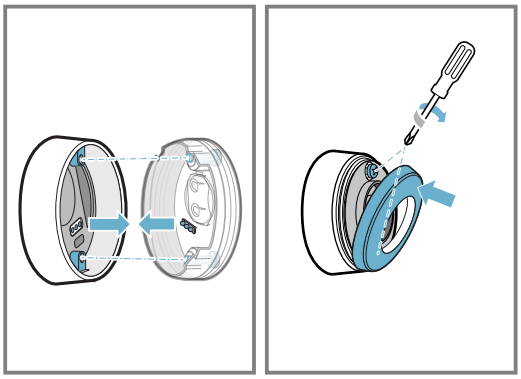

## 23.5 Adhering the silicone patch

The silicone patch secures the cooking sensor to the cookware. If you are using an item of cookware with the cooking functions for the first time, attach the silicone patch to the cookware.

1. The part of the pan where the patch is to be adhered. Clean the pan, dry it thoroughly and wipe the area where the patch is to be adhered with spirit, for example.
2. Remove the protective film from the silicone patch.
3. Adhere the silicone patch to the outside of the cookware in the correct place using the enclosed template as a guide.

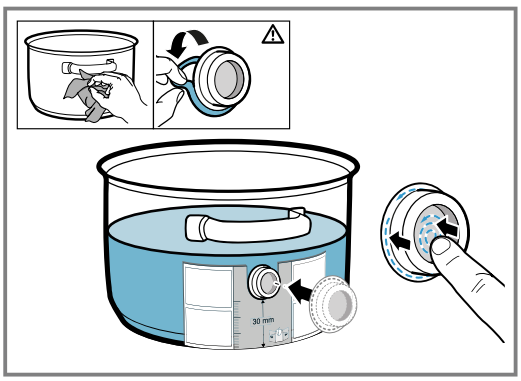


4. Press down all over the surface of the silicone patch, including in the centre.
5. Leave the adhesive to dry for one hour. Do not use or rinse out the cookware during this time.

**Notes**

- Cookware with the silicone patch must not be left to soak for long periods in soapy water.
- If the silicone patch comes loose, use a new one.

## 23.6 Cleaning

### Cooking sensor

Clean with a damp cloth. Do not place in the dishwasher and do not get it wet.
When you are not using the cooking sensor, remove it from the cookware and store it in a clean, secure location, away from any heat sources.

### Silicone patch

Clean and dry before attaching the cooking sensor. Dishwasher safe.

**Note:** The cookware with the silicone patch must not be left to soak for long periods in soapy water.

### Window for the wireless cooking sensor

Always keep the window clean and dry. Important:

1. Remove dirt and oil splatters regularly.
2. For cleaning, use a cloth or a cotton bud and window-cleaning solution.

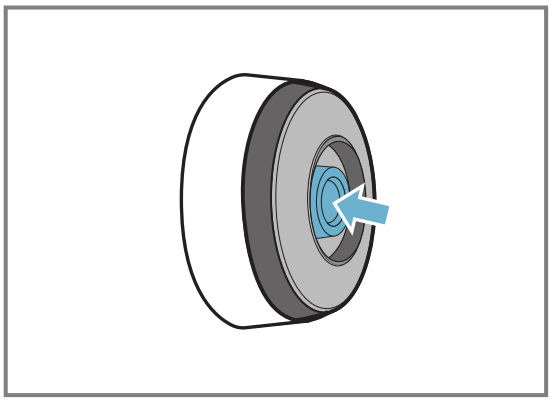

**Notes**

- Do not use hard or rough objects such as bristle brushes or scouring pads to clean the hob, and do not use scouring agents.
- Do not touch the window for the wireless cooking sensor with your fingers; this will soil or scratch it.

## 23.7 Declaration of Conformity

BSH Hausgeräte GmbH hereby declares that the appliance with wireless cooking sensor function meets the basic requirements and other relevant provisions of the Directive 2014/53/EU.
A detailed Declaration of Conformity in accordance with Directive RED can be found at www.gaggenau.com on the product page for your appliance under "Additional documents.
The logos and the Bluetooth® brand are registered trademarks and property of Bluetooth SIG, Inc. These trademarks are used by BSH Hausgeräte GmbH under licence. All other trademarks and trade names are owned by the respective companies.

# 24 Basic settings

You can configure the basic settings for your appliance to meet your needs.

## 24.1 Overview of the basic settings

Here you can find an overview of the basic settings and the factory preset values.

| Display | Selection |
|---|---|
| c1 | Audible signals<br>ON All signal tones are switched on.[1]<br>OFF Only the fault signal is switched on. |
| c2 | Time for selecting the cooking zone<br>The cooking zone stays selected for 5 seconds.<br>The cooking zone stays selected for 10 seconds.[1]<br>The cooking zone stays selected for 15 seconds.<br>OFF Unlimited: The cooking zone that was last set remains selected. |
| c3 | Power limitation. Limit the total power of the hob. The available settings depend on the maximum power of the hob.<br>OFF Deactivated. Maximum power of the hob.[1, 2]<br>1 1000 W minimum power.<br>1. 1500 W<br>...<br>3 3000 W recommended for 13 A.<br>3. 3500 W recommended for 16 A.<br>4 4000 W<br>4. 4500 W recommended for 20 A.<br>...<br>9 or 9. Maximum power of the hob.[2] |
| c4 | Restore factory settings<br>OFF Individual settings retained.[1]<br>ON Restore factory settings. |
| c5 | Cooking sensor function<br>Connect the wireless temperature sensor to the hob.<br>Set according to height above sea level:<br>1-2 Decrease.<br>3 Basic setting.<br>4-9 Increase. |
| c6 | Professional cooking function<br>Select individual cooking zone to preset the heat setting for the professional cooking function.<br>Preset values[1]:<br>Left flexible zone: 1.5<br>Top right cooking zone: 5.0<br>Bottom right cooking zone: 9.0 |
| c7 | Check cookware; cooking results<br>0 Not suitable.<br>1 Not perfect.<br>2 Suitable. |

[1] Factory setting
[2] The cooktop's maximum power is shown on the rating label.

| Display | Selection |
|---|---|
| c9 | Set air recirculation mode or air extraction mode<br>0 Air recirculation mode is set.[1]<br>1 Air extraction mode is set. |
| cA | Setting automatic start<br>A Switched on.[1] The ventilation system starts at the fan setting selected by the sensor.<br>1/2/3 Switched on. The ventilation system starts at fan setting 1, 2 or 3.<br>OFF Switched off. |
| cb | Set the sensor sensitivity for the ventilation<br>1 Lowest sensor sensitivity setting.<br>2 Medium sensor sensitivity setting.[1]<br>3 Highest sensor sensitivity setting. |
| cc | Set the automatic function with sensor-controlled run-on<br>OFF Switched off.<br>ON Switched on.[1] |
| cd | Home Connect<br>→ *"Overview of the Home Connect settings", Page 34* |

[1] Factory setting
[2] The cooktop's maximum power is shown on the rating label.

## 24.2 Opening the basic settings menu

**Requirement:** The hob is switched off.

1. Switch on the hob.
2. Press 🔧 within the next 10 seconds.
   – To see the individual displays, turn the twist knob.
   The first four displays show the product information.

| Product information | Display |
|---|---|
| Customer service index (CSI) | 01 |
| Production number | Fd |
| Production number 1 | 95. |
| Production number 2 | 0.5 |

3. Press 🔧 again.

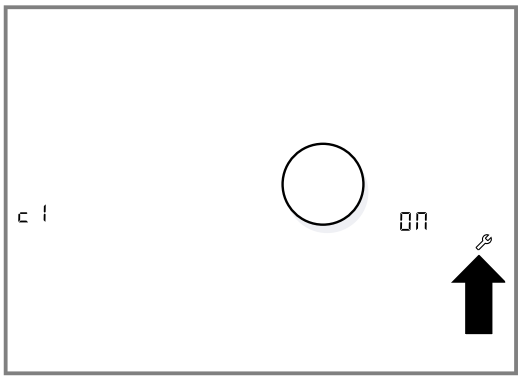


✔ The basic settings menu is opened.
✔ c1 and ON light up.

4. Press 🔧 repeatedly until the required function is displayed.
5. Use the twist knob to select the required setting.

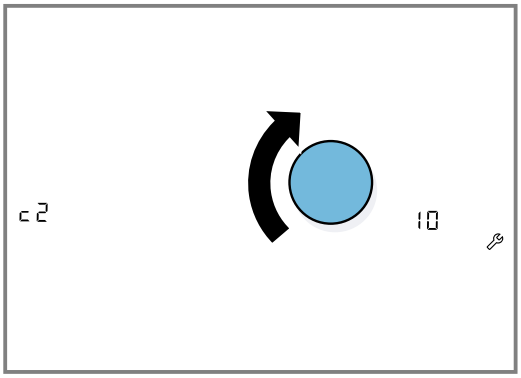


6. Press and hold 🔧 for at least 4 seconds.
✔ The settings are saved.
7. → *"Exiting the basic settings menu", Page 33*

### 24.3 Exiting the basic settings menu

▸ Switch off the hob using the main switch.

# 25 Home Connect

This appliance is network-capable. Connecting your appliance to a mobile device lets you control its functions via the Home Connect app, adjust its basic settings and monitor its operating status.
The Home Connect services are not available in every country. The availability of the Home Connect function depends on the availability of Home Connect services in your country. You can find information about this at: www.home-connect.com.

The Home Connect app guides you through the entire login process. Follow the instructions in the Home Connect app to configure the settings.

**Tip:** Please also follow the instructions in the Home Connect app.

**Notes**

- Please note the safety precautions in this instruction manual and make sure that they are also observed when operating the appliance via the Home Connect app.
  → *"Safety", Page 3*
- Operating the appliance on the appliance itself always takes priority. During this time it is not possible to operate the appliance using the Home Connect app.
- In networked standby mode, the appliance requires a maximum of 2 W.
- Hobs are not designed to be left unattended. Always monitor the cooking process.

### 25.1 Setting up the Home Connect app

1. Install the Home Connect app on your mobile device.
2. Start the Home Connect app and set up access for Home Connect.
   The Home Connect app guides you through the entire login process.

### 25.2 Setting up Home Connect

**Requirements**

- The appliance is connected to the power supply and is switched on.
- You have a mobile device with a current version of the iOS or Android operating system, e.g. a smartphone.
- The Home Connect app has been installed on your mobile device.
- The appliance is receiving signals from the WLAN home network (Wi-Fi) at its installation location.
- The mobile device and the appliance are within range of your home network's Wi-Fi signal.

1. Open the Home Connect app and scan the following QR code.
2. Follow the instructions in the Home Connect app.

### 25.3 Changing the Home Connect settings

1. Switch on the hob.
2. Press 🔧 within the next 10 seconds.
   The displays show the product information.

| Product information | Display |
|---|---|
| Customer service index (CSI) | 01 |
| Production number | Fd |
| Production number 1 | 95. |
| Production number 2 | 05 |

3. Press 🔧 again.
✔ The basic settings menu is opened.
✔ c1 and 07 light up.
4. Press 🔧 repeatedly until c d is displayed.
5. To change a Home Connect setting, press ⏱ repeatedly until the required setting is displayed.
   → *"Overview of the Home Connect settings", Page 34*
6. Use the twist knob to select the required value for the setting.

7. Press and hold 🔧 for at least 4 seconds.
✔ The settings are saved.
8. → *"Exiting the basic settings menu", Page 33*

## 25.4 Overview of the Home Connect settings

You can adjust the settings and network settings for Home Connect by going to your hob's basic settings.

| Setting | Selection or display | Additional information |
|---|---|---|
| HC1/NEt | Registration in the home network (WiFi)<br>OFF – Not connected/disconnect network<br>C01 – Connect automatically<br>C02 – Connect manually<br>ON – Connected | Log the hob on in the WiFi home network (WiFi) or disconnect from the network. |
| HC2/PAI | Connection to app<br>OFF – Not connected or login process complete<br>ON – Connect | HC2/PAI is only displayed if the hob is connected to the home network. |
| HC3/CON | Connect to home network (WiFi)<br>OFF – Wireless module switched off<br>ON – Wireless module switched on | If WiFi has been activated, you can use the Home Connect functions.<br>HC3/CON is only displayed if the hob has been previously connected to a network. |
| HC4/rES | Configure settings via app<br>OFF – Switched off<br>ON – Switched on[1] | If the setting is switched off, only the hob's operating statuses are displayed in the Home Connect app. |
| HC5/UPd | Software update<br>dEF – Update available and ready to install<br>INS – Start installation | HC5/UPd is only displayed if a software update is available. |
| HC6/rEd | Remote access by customer service<br>OFF – Not authorised<br>ON – Authorised | HC6/rEd is only displayed if customer service is attempting to connect to the hob. You can end this at any time after granting access. |
| HC7/StF | WiFi signal strength<br>NA – Not connected to home network (WiFi)<br>1 – Signal strength 1 (weak)<br>2 – Signal strength 2 (moderate)<br>3 – Signal strength 3 (good) | HC7/StF is only displayed if there is a connection to the WiFi. |
| HC8/SEr | Connection to the Home Connect server<br>OFF – Not connected<br>ON – Connected | HC8/SEr is only displayed if there is a connection to the WiFi. |

[1] Factory setting

## 25.5 Switching on WiFi

1. Open the basic setting cd.
2. Touch ⏱ repeatedly until the HC3 and CON settings flash alternately.
✔ OFF lights up.
3. Set the value to ON using the twist knob.
✔ 📶 lights up.
✔ WiFi is activated.

## 25.6 Switching off WiFi

**Notes**

- If WiFi has been activated, you can use the Home Connect function.
- In networked standby mode, your appliance requires a maximum of 2 W.

1. Open the basic setting cd.
2. Touch ⏱ repeatedly until the HC3 and CON settings flash alternately.
✔ ON lights up.
3. Set the value to OFF using the twist knob.
✔ 📶 goes out on the control panel.
✔ WiFi is deactivated.

**Note:** The network settings are saved. When the WiFi function is reactivated, the hob starts searching for a connection to the saved network.

## 25.7 Disconnecting from the network

You can disconnect your hob from the network at any time.

**Note:** If your hob is disconnected from the network, it is not possible to operate it using Home Connect.

1. Open the basic setting cd.

2. Touch ⏱ repeatedly until the HC 1 and NEt settings flash alternately.
✔ ON lights up.
3. Set the value to OFF using the twist knob.
✔ 📶 goes out on the control panel.
✔ The appliance is disconnected from the WiFi.

## 25.8 Software update

Your appliance's software can be updated using the software update function, e.g. for the purposes of optimisation, troubleshooting or security updates.
To do this, you must be a registered Home Connect user, have installed the app on your mobile device and be connected to the Home Connect server.
As soon as a software update is available, you will be informed via the Home Connect app and will be able to start the software update via the app. Once the update has been successfully downloaded, you can start installing it via the Home Connect app if you are in your home network (Wi-Fi). The Home Connect app informs you once installation is successful.

**Notes**

- The software update consists of two steps.
  - The first step is the download.
  - The second step is the installation on your appliance.
- You can continue to use your appliance as normal while updates are downloading. Depending on your personal settings in the app, software updates can also be set to download automatically.
- Installation takes a few minutes. You cannot use your appliance during installation.
- We recommend that you install security updates as soon as possible.

## 25.9 Remote diagnostics

Customer Service can use Remote Diagnostics to access your appliance if you contact them, have your appliance connected to the Home Connect server and if Remote Diagnostics is available in the country in which you are using the appliance.

**Tip:** For further information and details about the availability of Remote Diagnostics in your country, please visit the service/support section of your local website: www.home-connect.com.

## 25.10 Data protection

Please see the information on data protection.
The first time your appliance is registered on a home network connected to the Internet, your appliance will transmit the following types of data to the Home Connect server (initial registration):

- Unique appliance identification (consisting of appliance codes as well as the MAC address of the installed Wi-Fi communication module).
- Security certificate of the Wi-Fi communication module (to ensure a secure data connection).
- The current software and hardware version of your appliance.
- Status of any previous resetting to factory settings.

This initial registration prepares the Home Connect functions for use and is only required when you want to use the Home Connect functions for the first time.

**Note:** Please note that the Home Connect functions can only be utilised with the Home Connect app. Information on data protection can be retrieved in the Home Connect app.

# 26 Cookware test

You can use this function to check the speed and quality of the cooking process depending on the cookware. The result is a reference value and depends on the properties of the cookware and the cooking zone being used.

**Note:** You can find more information about this function under Basic settings → *Page 32* and on the type, size and positioning of the cookware in
→ *"Induction cooking", Page 7* and
→ *"Flex Zone", Page 16*.

## 26.1 Checking the cookware

1. At room temperature, place the cookware with approx. 200 ml water in the centre of the cooking zone whose diameter best fits the diameter of the base of the cookware.
2. → *"Opening the basic settings menu", Page 32*.
3. Select the c7 setting.
4. Touch the control panel.
✔ — flashes.
✔ The function is activated.
✔ After 10 seconds, the result for the quality and speed of the cooking process appear in the display.
5. Check the result using the overview of the → *"Cookware results", Page 35*.
6. To reactivate the function, if required, turn the twist knob again.

**Notes**

- If the cooking zone is much smaller than the diameter of the cookware, only the middle of the cookware heats up. The cooking result is not optimum.
- The flexible cooking zone is set to function as a single cooking zone; check only one item of cookware.

## 26.2 Cookware results

In the following overview, you can find the potential results for the quality and speed of the cooking process using the tested cookware.

| Display | Result |
|---|---|
| 0 | The cookware is not suitable for the cooking zone and therefore does not heat up. [1] |

[1] If there is a smaller cooking zone available, try the cookware again on the smaller cooking zone.

| Display | Result |
|---|---|
| 1 | The cookware is taking longer to heat up than expected and cooking is not progressing as well as it ought to. [1] |

[1] If there is a smaller cooking zone available, try the cookware again on the smaller cooking zone.

| Display | Result |
|---|---|
| 2 | The cookware is heating up correctly and cooking is progressing well. |

[1] If there is a smaller cooking zone available, try the cookware again on the smaller cooking zone.

# 27 Power limitation

You can use this function to set the total power of the hob. The hob is set at the factory. You can find the maximum power of the hob on the rating plate. You can use this function to adjust the configuration to the requirements of each electrical installation. To ensure that this set value is not exceeded, the hob automatically distributes the available power as needed between the cooking zones that are switched on.

While this function is activated, the output of each cooking zone may temporarily fall below the nominal value. If a cooking zone is switched on and the power limit is reached, _ lights up briefly. The appliance controls and selects the highest power level automatically. You can find out how to do this in Basic settings → *Page 32*.

# 28 Cleaning and servicing

To keep your appliance working efficiently for a long time, it is important to clean and maintain it carefully.

## 28.1 Cleaning products

You can obtain suitable cleaning products and glass scrapers from customer service, the online shop or a retailer.

**ATTENTION!**

Unsuitable cleaning products may damage the surfaces of the appliance.

- Never use unsuitable cleaning products.
- Do not use cleaning products while the hob is still hot. This may cause marks on the surface.

**Unsuitable cleaning products**

- Undiluted detergent
- Detergent intended for dishwashers
- Abrasive cleaners
- Aggressive cleaning products such as oven spray or stain remover
- Abrasive sponges
- High-pressure or steam jet cleaners

## 28.2 Components to be cleaned or replaced

The following overview shows the components of the appliance that you either replace or clean.

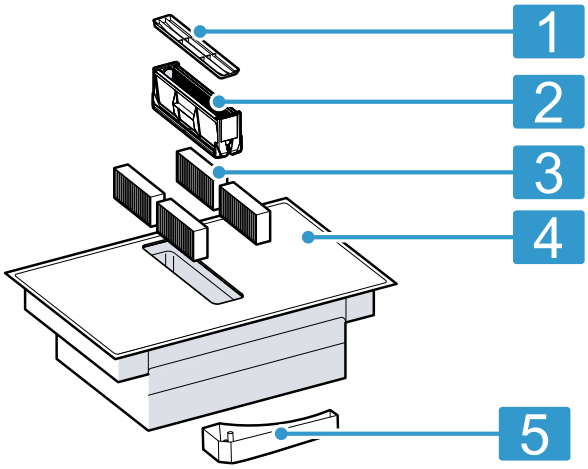


| | |
|---|---|
| 1 | Ventilation grille |
| 2 | Grease filter |
| 3 | Odour filter or acoustics filter |
| 4 | Glass ceramic |
| 5 | Overflow container |

## 28.3 Cleaning the hob surround

If the hob frame is dirty or stained after use, clean this.

**Notes**

- Observe the information on unsuitable cleaning products. → *Page 36*
- Do not use a glass scraper.

1. Clean the hob frame with hot soapy water and a soft cloth.
   Wash new sponge cloths thoroughly before use.

2. Dry with a soft cloth.

## 28.4 Cleaning the hob

Clean the hob after every use to stop cooking residues from getting burnt on.

**Note:** Note the information on unsuitable cleaning products. → *Page 36*

**Requirements**

- The hob has cooled down.
- Leave the grease filter in the appliance while cleaning the hob to collect food remnants in the grease filter.

1. Remove heavy soiling using a glass scraper.
2. Clean the hob with a cleaning agent for glass ceramic.
   Follow the cleaning instructions on the detergent's packaging.
   **Tip:** You can achieve good cleaning results using a special sponge for glass ceramic.

## 28.5 Changing the odour filter or acoustics filter

Change the odour filter regularly. Change the acoustics filters if they are dirty.

**Note:** You can obtain odour filters or acoustics filters from specialist retailers, customer service or in the online shop.

1. To keep them in good working order, only use genuine replacement filters.
2. Remove the ventilation grille.

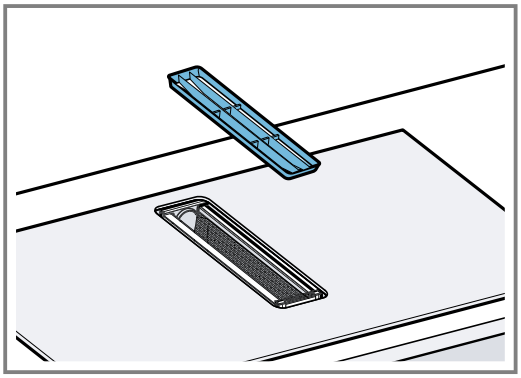

3. **ATTENTION!**
   Falling grease filters may damage the hob below.
   ▸ Grip below the grease filter with one hand.
   Remove the grease filter.
   – Fat may accumulate in the bottom of the container. Hold the grease filter level to prevent grease from dripping out.

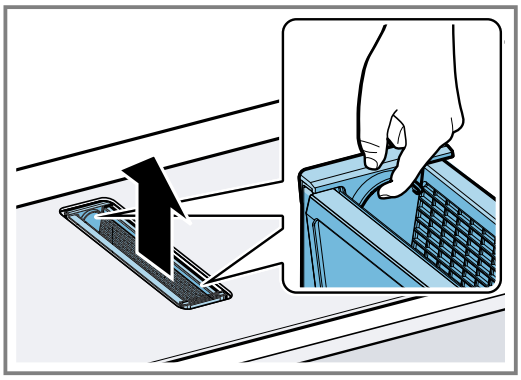

4. Remove the four odour filters or acoustics filters, and dispose of them properly.

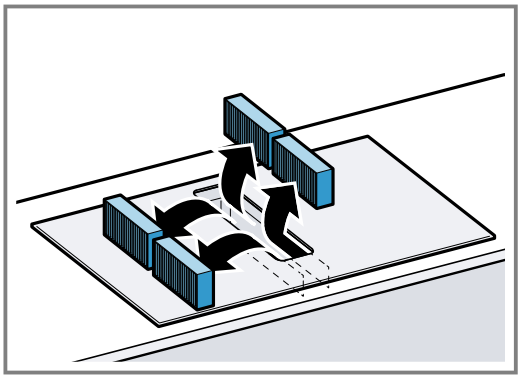

5. Insert two odour filters or acoustics filters into the left and right of the appliance and slide them forwards.

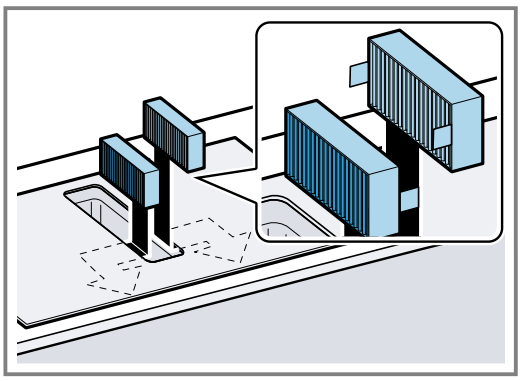

6. Insert the other odour filters or acoustics filters into the left and right of the appliance.

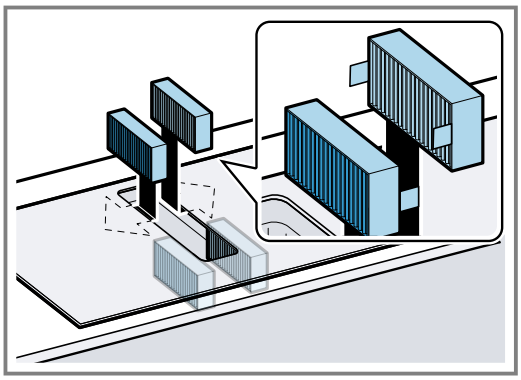

7. Insert the grease filter.

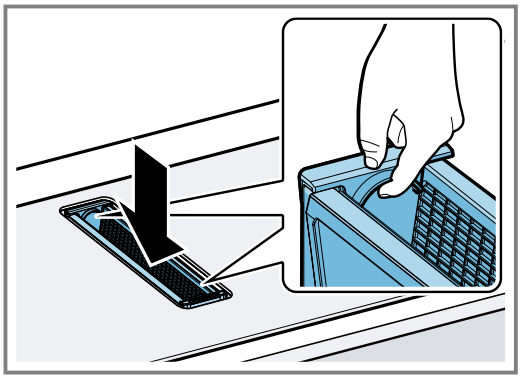

8. Place the ventilation grille on top.

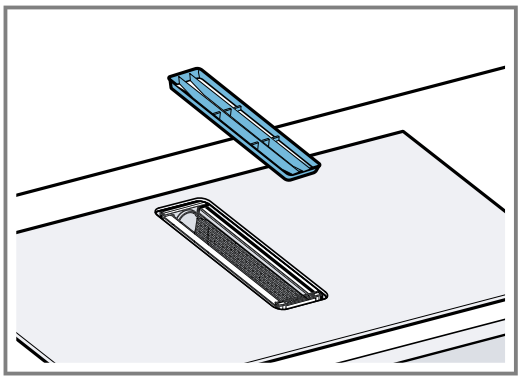

### Resetting the saturation indicator

**Requirement:** After the appliance has been switched off, a signal tone sounds and F CHANGE lights up.

1. Replace the odour filter. → *Page 37*
2. Switch off the appliance.
✔ F CHANGE lights up.
3. Press and hold ✤ until a signal tone sounds.
✔ The saturation indicator is reset.

## 28.6 Cleaning the grease filters

Grease filters filter the grease from the cooking vapour. To keep it in good working order, you must clean the grease filter regularly.

⚠ **WARNING – Risk of fire!**

Fatty deposits in the grease filters may catch fire.

- Never operate the appliance without a grease filter.
- Clean the grease filters regularly.
- Never work with naked flames close to the appliance (e.g. flambéing).

1. Remove the ventilation grille.

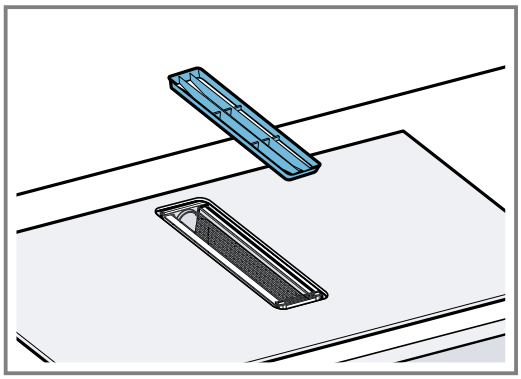

2. **ATTENTION!**
Falling grease filters may damage the hob below.
- Grip below the grease filter with one hand.

Remove the grease filter.
– Fat may accumulate in the bottom of the container. Hold the grease filter level to prevent grease from dripping out.

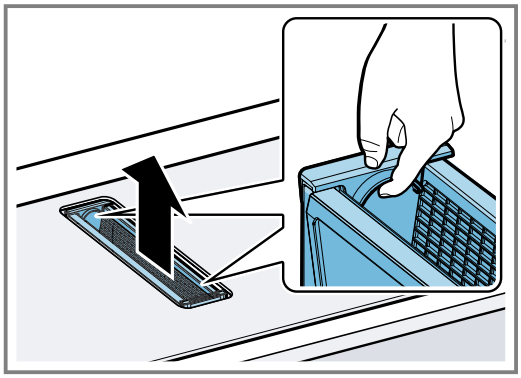

3. Clean the grease filter.
– → *"Cleaning the grease filters manually", Page 39*
– → *"Cleaning the grease filter in the dishwasher", Page 39*
4. If required, remove the odour filters or acoustics filters and clean the appliance from the inside.
→ *"Changing the odour filter or acoustics filter", Page 37*
5. If any objects get into the appliance, remove these objects and ensure that the supply to the overflow container is not blocked.
6. Wipe out the inside of the appliance with soapy water and a dish cloth.
7. After cleaning, reinsert the dried grease filter.
8. Place the ventilation grille on top.

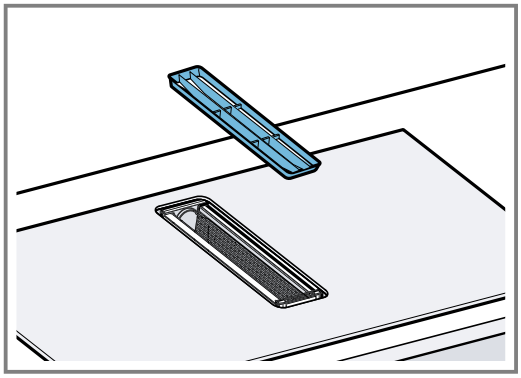

### Cleaning the grease filters manually

1. Dismantle the grease filter.

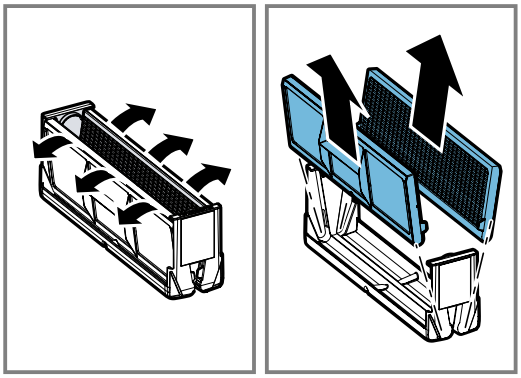

2. Soak the grease filter in hot soapy water.
3. Use a brush to clean the grease filter.
   Do not use aggressive, acidic or alkaline cleaning products.
   Use special grease solvent for stubborn dirt. You can purchase the grease solvent from the after-sales service, through our online shop or in a specialist shop.
4. Rinse the grease filters thoroughly.
5. Allow the grease filters to drain.

### Cleaning the grease filter in the dishwasher

1. For optimum cleaning results, disassemble the grease filter.

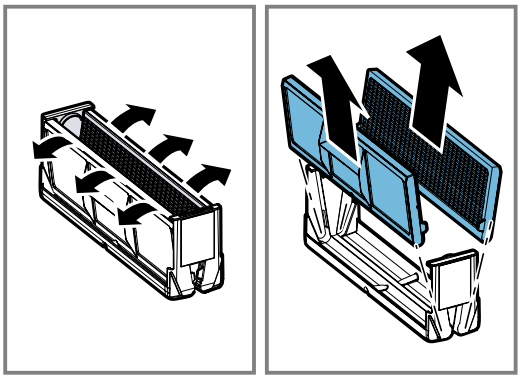

2. Place the individual components of the grease filter loosely in the dishwasher and do not jam them in.

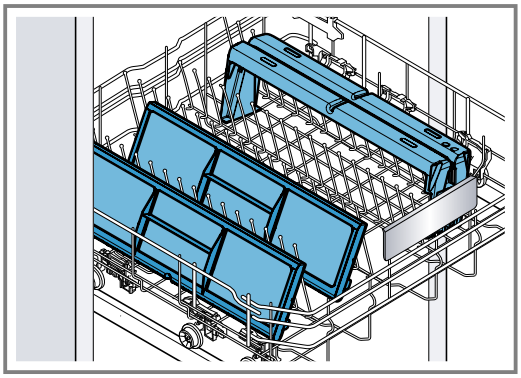

   Do not clean heavily soiled grease filters with tableware.
   Do not use aggressive, acidic or alkaline cleaning products.
3. Start the dishwasher.
   Select a temperature setting below 70 °C.
4. Leave the grease filter to drain.

## 28.7 Cleaning the ventilation grille

- Clean the ventilation grille with a damp dish cloth and dry it with a soft cloth, or clean it in the dishwasher.
  When cleaning in the dishwasher, the surface may become discoloured. The discolouration does not affect its usability.

## 28.8 Cleaning the overflow container

The overflow container collects liquids or objects that come into the appliance from above.

**Requirement:** The appliance has cooled and the residual heat indicator has gone out.

1. Hold the overflow container with one hand and unscrew it with the other hand.
   – Hold the overflow container level to prevent liquid from leaking out.

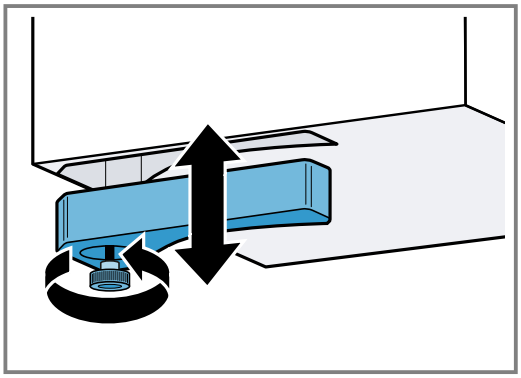

2. Empty the overflow container and rinse it out.
3. If required, unscrew the screw and clean the overflow container without the screw in the dishwasher.
4. Clean the overflow container before screwing it back into place.
5. Ensure that the supply to the overflow container is not blocked.
   Remove any objects that have entered the appliance once it has cooled down. To do this, remove the grease filter. → *Page 38*

## 28.9 Cleaning the twist knob

Clean the twist knob as necessary.

**Notes**

- Note the information on unsuitable cleaning products. → *Page 36*
- Do not use harsh or abrasive cleaning products.
- Do not clean the twist knob in the dishwasher.
- Do not immerse the twist knob in rinsing water.

- Clean the twist knob with lukewarm detergent solution and a soft cloth.

# 29 FAQs

This is where you can find an overview of the frequently asked questions regarding use, noises, cookware and cleaning.

## 29.1 Using the appliance

| Question | Answer |
|---|---|
| Why can I not switch on the hob and why is the Childproof lock display lit? | ■ The Childproof lock function is switched on. You can find further information about this function under → *"Childproof lock", Page 29*. |
| Why are the illuminated displays flashing and why is a signal sounding? | ■ Clean the surface of the control panel of any liquids or food residue. Remove any objects that may cover the control panel. You can find further information about deactivating the signal tone under → *"Basic settings", Page 32*. |
| The ventilation system does not switch on even though the automatic start is activated. | ■ Manually activate the ventilation system or check the configuration of the automatic start. You can find additional information about this in the section entitled → *"Basic settings", Page 32*. |
| The ventilation system runs with too much or too little power in sensor control mode. | ■ The sensor sensitivity for the ventilation system is incorrectly configured. You can find additional information about this setting in → *"Basic settings", Page 32*. |
| The ventilation system continues to run even though the cooking zones have been switched off. | ■ Manually switch off the ventilation system. You can find additional information about this setting in the section entitled . |
| The ventilation system switches on even though the appliance is switched off. | ■ The run-on function with sensor control setting is selected. You can find additional information about this setting in → *"Basic settings", Page 32*. |
| The air intake is too weak. | ■ Ensure that the grease filter is clean. To find out how to clean and replace the filter, refer to the section entitled → *"Cleaning and servicing", Page 36*. |

## 29.2 Noise

| Question | Answer |
|---|---|
| Why can I hear noises while I'm cooking? | ■ Noises may be generated while using the hob depending on the base material of the cookware. These noises are normal for induction technology. They do not indicate that there is a fault. |
| What noises can occur and what is the significance of the noises? | ■ **A deep humming noise similar to a transformer:** Occurs when cooking at a high power level. This noise disappears or becomes quieter when you reduce the power level.<br>■ **A quiet whistling noise:** This can be heard when the cookware is empty. This noise disappears when you add water or food to the cookware.<br>■ **Crackling:** This noise occurs when the cookware is made from different multilayer materials, or if you use cookware of different sizes and different materials. The loudness of the noise can vary depending on the quantity of food being cooked or the cooking method.<br>■ **Loud whistling noises:** These may arise if you are operating two cooking zones at the same time and at the maximum power level. These whistling noises disappear or become quieter when you reduce the power level.<br>■ **Fan noises:** The hob is equipped with a fan that switches on automatically at high temperatures. The fan may also continue to run after you have switched the hob off if the temperature measured is still too high. |

### 29.3 Cookware

| Question | Answer |
|---|---|
| Which cookware is suitable for the induction hob? | ■ You can find more information on which items of cookware are suitable for induction cooking in<br>→ *"Induction cooking", Page 7*. |
| Why is the cooking zone not heating up and why is the heat setting flashing? | ■ The cookware is on a different cooking zone to the one that has been switched on.<br>Check that you have switched on the correct cooking zone.<br>■ The cookware is too small for the cooking zone that is switched on or it is not suitable for induction cooking. Ensure that the cookware is suitable for induction cooking and that it is placed on the cooking zone which best corresponds to its size.<br>You can find more information about this in<br>→ *"Induction cooking", Page 7* |
| Why is it taking so long for the cookware to heat up or why is it not heating up sufficiently despite being on a high power setting? | ■ The cookware is too small for the cooking zone that is switched on or it is not suitable for induction cooking. Ensure that the cookware is suitable for induction cooking and that it is placed on the cooking zone which best corresponds to its size.<br>You can find more information about this in<br>→ *"Induction cooking", Page 7*<br>→ *"Cookware", Page 8* |

### 29.4 Cleaning

| Question | Answer |
|---|---|
| How can I clean the hob? | ■ You can achieve the best results by using special glass-ceramic cleaning products. Do not use harsh or abrasive cleaning products, dishwater detergent (concentrated) or scouring pads.<br>You can find more information about this under<br>→ *"Cleaning and servicing", Page 36*. |
| There is water in the cabinet underneath the hob. | ■ Check whether the overflow container is full.<br>You can find further information about cleaning and caring for the hob under<br>→ *"Cleaning and servicing", Page 36*. |
| How often do I need to clean the overflow container? | ■ Clean the overflow container frequently.<br>You can find further information about how to clean the overflow container under<br>→ *"Cleaning and servicing", Page 36*. |
| How often do I need to clean the grease filter? | ■ Regularly clean the grease filter.<br>To find out how to clean and replace the filter, refer to the section entitled<br>→ *"Cleaning and servicing", Page 36*. |

# 30 Troubleshooting

You can rectify minor faults on your appliance yourself. Read the troubleshooting information before contacting after-sales service. This will avoid unnecessary costs.

⚠ **WARNING – Risk of injury!**

Improper repairs are dangerous.

- ▸ Repairs to the appliance should only be carried out by trained specialist staff.
- ▸ If the appliance is defective, call Customer Service.
  → *"Customer Service", Page 44*

⚠ **WARNING – Risk of electric shock!**

Improper repairs are dangerous.

- ▸ Repairs to the appliance should only be carried out by trained specialist staff.
- ▸ Only use genuine spare parts when repairing the appliance.
- ▸ If the power cord or the appliance power cable of this appliance is damaged, it must be replaced with a special power cord or special appliance power cable, which is available from the manufacturer or its Customer Service.

## 30.1 Malfunctions

| Fault | Cause and troubleshooting |
|---|---|
| The appliance is not working. | The mains plug of the power cord is not plugged in.<br>▸ Connect the appliance to the power supply. |
| | There has been a power cut.<br>▸ Check whether the lighting in your room or other appliances are working. |
| | The circuit breaker in the fuse box has tripped.<br>▸ Check the circuit breaker in the fuse box. |
| The touch fields for the ventilation functions do not light up. | The control for the motor does not work.<br>▸ Call<br>→ *"Customer Service", Page 44*. |
| The ventilation is not working. | The motor or the control are defective.<br>▸ Call<br>→ *"Customer Service", Page 44*. |
| The symbol lighting is not working. | The control unit is defective.<br>▸ Call<br>→ *"Customer Service", Page 44*. |
| F CHANGE | The odour filters are saturated.<br>▸ Replace the odour filter. → *Page 37* |
| | The saturation indicator lights up even though the odour filter has been replaced.<br>▸ Reset the saturation indicator. → *Page 38* |
| No display | The power supply has been disconnected.<br>▸ Use other electrical appliances to check whether a short circuit has occurred in the power supply. |
| | The appliance has not been connected in accordance with the circuit diagram.<br>▸ Ensure that the appliance has been connected in accordance with the circuit diagram. |
| | Electronics fault.<br>▸ If the fault cannot be eliminated, inform after-sales service. |
| An audible signal sounds. | The control panel is damp or an object is covering it.<br>▸ Dry the control panel or remove the object. |
| F2/E8207/E7015 | The electronics have overheated and have switched off the corresponding cooking zone.<br>**1.** Wait until the electronics have cooled sufficiently.<br>**2.** Press any of the hob's touch fields. |
| F4/E8208/E7015 | The electronics have overheated and all of the cooking zones have been switched off.<br>**1.** Wait until the electronics have cooled sufficiently.<br>**2.** Press any of the hob's touch fields. |
| F5 + heat setting and signal tone | There is hot cookware near the control panel. There is a risk that the electronics will overheat.<br>**1.** Remove the cookware.<br>**2.** Wait a few seconds.<br>✔ The fault display goes out.<br>**3.** Continue cooking as usual. |
| F5+ audible signal | There is hot cookware near the control panel. To protect the electronics, the cooking zones have been switched off.<br>**1.** Remove the cookware.<br>**2.** Wait a few seconds.<br>✔ The fault display goes out.<br>**3.** Continue cooking as usual. |
| F1/F6 | The cooking zone has overheated and it has been switched off to protect the work surface<br>**1.** Wait until the electronics have cooled sufficiently.<br>**2.** Switch on the cooking zone again. |
| F8 | The cooking zone has been operating continuously for an extended period. Automatic switch-off is activated.<br>▸ Observe the information on automatic switch-off → *Page 29*. |

| Fault | Cause and troubleshooting |
|---|---|
| F9 | The FlexPlus cooking zone cannot be activated.<br>**1.** Check the fault display by pressing any control.<br>**2.** Continue to cook with the remaining cooking zones.<br>**3.** Contact the after-sales service. |
| E7010 | The hob is unable to connect to your home network or the extractor hood.<br>**1.** Press any touch field to confirm the fault display.<br>**2.** Continue cooking as usual without connecting to the home network.<br>**3.** If E7010 lights up again, contact customer service → *Page 44*. |
| E8202 | The cooking sensor has overheated and the cooking zone has been switched off.<br>▸ Wait until the cooking sensor has cooled down sufficiently before activating the function again. |
| E8203 | The cooking sensor has overheated and all of the cooking zones have been switched off.<br>▸ If you are not using the cooking sensor, remove it from the cookware and keep it away from other cooking zones or heat sources. Switch on the cooking zones. |
| E8204 | The battery in the cooking sensor is almost flat. The next time you cook, you may be interrupted by the battery running out.<br>▸ Replace the 3 V CR2032 battery. You can find additional information in "Replacing the battery" → *Page 30*. |
| E8205 | The connection to the cooking sensor is interrupted.<br>▸ Switch off the function and reactivate the function.<br>→ *"Connecting the wireless cooking sensor to the control panel", Page 25* |
| E8206 | The cooking sensor is broken or faulty.<br>▸ Contact our technical customer service → *Page 44*. |
| The wireless cooking sensor display does not light up. | The wireless cooking sensor is not responding and the display does not light up.<br>▸ Replace the 3 V CR2032 battery. You can find additional information in "Replacing the battery" → *Page 30*.<br>▸ If this does not solve the problem, press and hold the symbol on the cooking sensor for 8–10 seconds and then reconnect the cooking sensor to the hob. You can find more information about this in<br>→ *"Connecting the wireless cooking sensor to the control panel", Page 25*<br>▸ If the problem persists, contact our technical customer service → *Page 44*. |
| The display on the cooking sensor flashes twice. | The battery in the cooking sensor is almost flat. The next time you cook, you may be interrupted by the battery running out.<br>▸ Replace the 3 V CR2032 battery. You can find additional information in "Replacing the battery" → *Page 30*. |
| The display on the cooking sensor flashes three times. | The connection to the cooking sensor is interrupted.<br>**1.** Press and hold the symbol on the cooking sensor for 8 10 seconds.<br>**2.** Reconnect the cooking sensor to the hob.<br>→ *"Resetting the wireless cooking sensor", Page 25* |
| E9000 / E9010 | The operating voltage is incorrect and outside of the normal operating range.<br>▸ Contact your energy supplier. |
| U400 | The hob is not connected correctly.<br>▸ Disconnect the hob from the mains. Connect the hob in accordance with the circuit diagram. |
| dE | Demo mode is activated.<br>**1.** Disconnect the hob from the mains power supply.<br>**2.** Wait for 30 seconds and connect the hob.<br>**3.** Press any touch field within the next 3 minutes.<br>✔ Demo mode has now been deactivated. |

## 30.2 Displaying the fault code

▸ If E lights up, select the relevant cooking zone and press and hold the twist knob to read the fault code.

## 30.3 Standby mode in the event of an error message

If the appliance displays an error message, the appliance does not switch to standby mode.

### 30.4 If the error message is repeated, inform customer service

**Requirement:** The error message is not listed in the Overview → *Page 42*.

1. Disconnect the appliance from the mains power supply.
2. Wait 30 seconds.
3. Reconnect the appliance.
4. If the error message appears again, inform customer service and specify the exact error message.

## 31 Customer Service

Function-relevant genuine spare parts according to the corresponding Ecodesign Order can be obtained from Customer Service for a period of at least 10 years from the date on which your appliance was placed on the market within the European Economic Area.

**Note:** Under the terms of the manufacturer's warranty the use of Customer Service is free of charge.

Detailed information on the warranty period and terms of warranty in your country is available from our after-sales service, your retailer or on our website.
If you contact Customer Service, you will require the product number (E-Nr.) and the production number (FD) of your appliance.
The contact details for Customer Service can be found in the enclosed Customer Service directory or on our website.

### 31.1 Product number (E-Nr.) and production number (FD)

You can find the product number (E-Nr.) and the production number (FD) on the appliance's rating plate. The rating plate is located on the underside of the appliance.

The rating plate can be found:
- On the appliance certificate.
- On the underside of the hob, towards the front.

The product number (E no.) can also be found on the glass ceramic. You can also display the customer service index (KI) and the production number (FD) in the basic settings. → *Page 32*

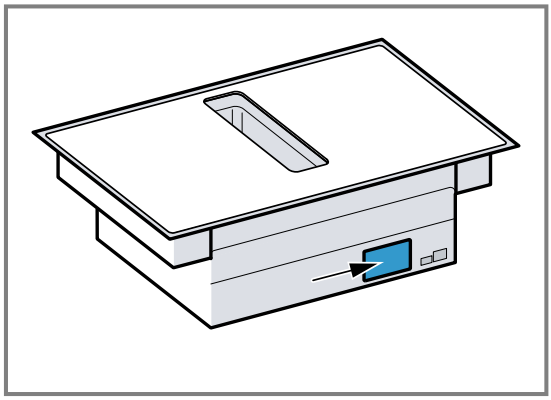

Make a note of your appliance's details and the Customer Service telephone number to find them again quickly.

## 32 Declaration of Conformity

BSH Hausgeräte GmbH hereby declares that the appliance with Home Connect functionality conforms to the basic requirements and other relevant provisions of Directive 2014/53/EU.
A detailed RED Declaration of Conformity can be found online at www.gaggenau.com among the additional documents on the product page for your appliance.

Hereby, BSH Hausgeräte GmbH declares that the appliance with Home Connect functionality is in compliance with relevant statutory requirements.[1]
A detailed Declaration of Conformity can be found online at www.gaggenau.com/gb among the additional documents on the product page for your appliance.[1]

2.4 GHz band (2400–2483.5 MHz): Max. 100 mW
5-GHz band (5150–5350 MHz + 5470–5725 MHz): max. 50 mW

| | | | | | | | | | |
|---|---|---|---|---|---|---|---|---|---|
| | BE | BG | CZ | DK | DE | EE | IE | EL | ES |
| | FR | HR | IT | CY | LI | LV | LT | LU | HU |
| | MT | NL | AT | PL | PT | RO | SI | SK | FI |
| | SE | NO | CH | TR | IS | UK (NI) | | | |
| 5 GHz WLAN (Wi-Fi): For indoor use only. | | | | | | | | | |

| | | | | | | | |
|---|---|---|---|---|---|---|---|
| AL | BA | MD | ME | MK | RS | UK | UA |
| 5 GHz WLAN (Wi-Fi): For indoor use only. | | | | | | | |

[1] Only applies to Great Britain

## 32.1 Statement of Compliance for Great Britain

**Product type**
This statement of compliance covers the products described in this information for use whose model identifier group is seen on the title page. The full model identifier is made up of the characters before the slash in the product number (E no.) which can be found on the rating plate. Alternatively, you can also find the model identifier in the first line of the UK Energy Label.

**Name and address of manufacturer**
BSH Hausgeräte GmbH, Carl-Wery-Strasse 34, 81739 München, Germany
This statement of compliance is prepared by the manufacturer.
The manufacturer, BSH Hausgeräte GmbH deems that it has complied with

- provision 5.1-1 of ETSI EN 303 645 v2.1.1 and, where relevant, provision 5.1-2 of ETSI EN 303 645 v2.1.1;
- provision 5.2-1 of ETSI EN 303 645 v2.1.1;
- provision 5.3-13 of ETSI EN 303 645 v2.1.1.

**Support period**
BSH Hausgeräte GmbH will provide security updates that are necessary to maintain the main functions free of charge until at least 28/02/2034.

**BSH Hausgeräte GmbH**
Carl-Wery-Straße 34
81739 München, GERMANY
www.gaggenau.com

Valid within Great Britain:
Imported to Great Britain by
BSH Home Appliances Ltd.
Grand Union House
Old Wolverton Road
Wolverton, Milton Keynes
MK12 5PT
United Kingdom

GAGGENAU

9001832438 en (040424)